CREEK
TECHNICAL SERVICES, LLC

Registry No. 29824
17520 Edinburgh Dr
Tampa, FL 33647
(813) 480-3421

EVALUATION REPORT **FLORIDA BUILDING CODE, 8TH EDITION (2023)**

Issued August 8, 2023

Manufacturer: PERFORMANCE ROOF SYSTEMS, INC.
A SOPREMA Group Company
4800 Martin Luther King Jr. Blvd.
Kansas City, MO 64130
(800) 727-9872
www.performanceroofsystems.us

Quality Assurance: UL LLC (QUA1743)

SCOPE

Category: Roofing
Subcategory: Single Ply Roof System
Code Edition: Florida Building Code, 8th Edition (2023) including High-Velocity Hurricane Zones (HVHZ)
Code Sections: 1504.3.1, 1504.6, 1507.12, 1515.1.1, 1515.1.4, 1523.1.1, 1523.6.2
Properties: Wind Resistance, Physical Properties

PRODUCT DESCRIPTION

Products	Specification	Description
SENTINEL® G150	ASTM D 4434	Nominal 60-mil thick single-ply roof membrane composed of a thermoplastic polyvinyl chloride film reinforced with fiberglass
SENTINEL® G200	ASTM D 4434	Nominal 80-mil thick single-ply roof membrane composed of a thermoplastic polyvinyl chloride film reinforced with fiberglass
SENTINEL® P150	ASTM D 4434	Nominal 60-mil thick single-ply roof membrane composed of a thermoplastic polyvinyl chloride film laminated to both sides of a polyester fabric scrim
SENTINEL® P200	ASTM D 4434	Nominal 80-mil thick single-ply roof membrane composed of a thermoplastic polyvinyl chloride film laminated to both sides of a polyester fabric scrim
SENTINEL® P150 HFB	ASTM D 4434	Nominal 60-mil thick single-ply roof membrane composed of a thermoplastic polyvinyl chloride film laminated to both sides of a polyester fabric scrim and backed with fleece.
SENTINEL® P200 HFB	ASTM D 4434	Nominal 80-mil (DF80) thick single-ply roof membrane composed of a thermoplastic polyvinyl chloride film laminated to both sides of a polyester fabric scrim and backed with fleece.

This evaluation report is provided for State of Florida product approval under Rule 61G20-3. The manufacturer shall notify CREEK Technical Services, LLC of any product changes or quality assurance changes throughout the duration for which this report is valid. This evaluation report does not express nor imply warranty, installation, recommended use, or other product attributes that are not specifically addressed herein.

REFERENCES

Entity	Report No.	Standard
Atlantic & Caribbean Roof Consulting (TST4671)	ACRC 15-032	TAS 114(D) (2011)
Atlantic & Caribbean Roof Consulting (TST4671)	ACRC 15-036	TAS 114(D) (2011)
Atlantic & Caribbean Roof Consulting (TST4671)	ACRC 17-009	TAS 114(D) (2011)
Certified Testing Laboratories (TST1577)	CTLA 107R	TAS 114 (J)(2011)
Certified Testing Laboratories (TST1577)	CTLA 107R-A	TAS 114(J) (2011)
NEMO ETC LLC (TST6049)	SOP-SC16600.12.17	FM 4470 (2016)
NEMO ETC LLC (TST6049)	SOP-SC16600.01.18-1-R1	Physical Properties
NEMO ETC LLC (TST6049)	4L-CEL-18-001.12.18-3	FM 4474(D) (2011); TAS 114(J) (2011)
NEMO ETC LLC (TST6049)	NG-SC16705.10.18	FM 4474(B) & (D) (2011)
NEMO ETC LLC (TST6049)	4-SOP-18005.07.18-2	FM 4474(C) (2011)
NEMO ETC LLC (TST6049)	4a-SOP-19-LSWUS-03.A	FM 4474(D) (2011); TAS 114(J) (2011);
PRI Construction Materials Technologies (TST5878)	DLRI-014-02-01	FM 4474(D) (2011); TAS 114(J) (2011)
PRI Construction Materials Technologies (TST5878)	DLRI-018-02-01	FM 4474(D) (2011); TAS 114(J) (2011)
PRI Construction Materials Technologies (TST5878)	DLRI-021-02-01 Rev 11	ASTM D 1761 (2006); TAS 117(A) & (B) (1995);FM 4474 (2011)
PRI Construction Materials Technologies (TST5878)	DLRI-030-02-01	FM 4474(B) (2011); TAS 114(D) (2011)
PRI Construction Materials Technologies (TST5878)	DLRI-045-02-01	FM 4474(B) (2011); TAS 114(D) (2011)
PRI Construction Materials Technologies (TST5878)	DLRI-063-02-01	FM 4474(B) (2011); TAS 114(D) (2011)
PRI Construction Materials Technologies (TST5878)	DLRI-073-02-01	FM 4474(D) (2011); TAS 114(J) (2011)
PRI Construction Materials Technologies (TST5878)	DLRI-077-02-01	FM 4474(D) (2011); TAS 114(J) (2011)
PRI Construction Materials Technologies (TST5878)	DLRI-077-02-02	FM 4474(D) (2011); TAS 114(J) (2011)
PRI Construction Materials Technologies (TST5878)	DLRI-086-02-01	FM 4474(D) (2011); TAS 114(J) (2011); UL 1897 (2015)
PRI Construction Materials Technologies (TST5878)	DLRI-086-02-02	FM 4474(D) (2011); TAS 114(J) (2011); UL 1897 (2015)
PRI Construction Materials Technologies (TST5878)	NGC-034-02-01	FM 4474(D) (2011); TAS 114(J) (2011); UL 1897 (2015)
PRI Construction Materials Technologies (TST5878)	NGC-035-02-01	FM 4474(D) (2011); TAS 114(J) (2011); UL 1897 (2015)
PRI Construction Materials Technologies (TST5878)	SOP-074-02-01	FM 4474(B) (2011); TAS 114(D) (2011)
PRI Construction Materials Technologies (TST5878)	SOP-082-02-01	ASTM D 4434 (2015)
PRI Construction Materials Technologies (TST5878)	SOP-084-02-01	ASTM D 4434 (2015)
PRI Construction Materials Technologies (TST5878)	SOP-085-02-01	ASTM D 4434 (2015)
Trinity ERD (TST6049)	D42320.08.12	FM 4474(D) (2011); TAS 114(J) (2011)
Trinity ERD (TST6049)	NG-SC9815.11.15	FM 4474 (2011); TAS 114(D) (2011)
Trinity ERD (TST6049)	S39500SC	FM 4470 (2016)
Trinity ERD (TST6049)	S47160.01.14	FM 4470 (2016); TAS 114(H) (1995)
Trinity ERD (TST6049)	SFS-SC10010.02.16	FM 4474(D) (2011); TAS 114(J) (2011); UL 1897 (2015)
Trinity ERD (TST6049)	SOP-SC12130.16	FM 4470 (2016)
Trinity ERD (TST6049)	SOP-SC14555.07.17	FM 4474(D) (2011); TAS 114(J) (2011); UL 1897 (2015)
Trinity ERD (TST6049)	SOP-SC14560.09.17-1	TAS 114(D) (2011);
Trinity ERD (TST6049)	SOP-SC14560.12.17	FM 4474(D), (2011); TAS 114(J) (2011);
Trinity ERD (TST6049)	SOP-SC16600.12.17-2	FM 4470 (2016)
FM Approvals (TST1867)	3025185	FM 4470 (2016)
FM Approvals (TST1867)	3033314	FM 4470 (2016)
FM Approvals (TST1867)	3040741	FM 4470 (2016)
FM Approvals (TST1867)	3042559	FM 4470 (2016)
FM Approvals (TST1867)	3044466	FM 4470 (2016)
FM Approvals (TST1867)	3045101	FM 4470 (2016)
FM Approvals (TST1867)	3046765	FM 4470 (2016)
FM Approvals (TST1867)	3050963	FM 4470 (2016)
FM Approvals (TST1867)	3051109	FM 4470 (2016)
FM Approvals (TST1867)	3051408	FM 4470 (2016)
FM Approvals (TST1867)	3053841	FM 4470 (2016)
FM Approvals (TST1867)	3053475	FM 4470 (2016)
FM Approvals (TST1867)	3053933	FM 4470 (2016)
FM Approvals (TST1867)	3054028	FM 4470 (2016)
FM Approvals (TST1867)	3054633	FM 4470 (2016)
FM Approvals (TST1867)	3055167	FM 4470 (2016)
FM Approvals (TST1867)	3057352	FM 4470 (2016)
FM Approvals (TST1867)	3057607	FM 4470 (2016)

This evaluation report is provided for State of Florida product approval under Rule 61G20-3. The manufacturer shall notify CREEK Technical Services, LLC of any product changes or quality assurance changes throughout the duration for which this report is valid. This evaluation report does not express nor imply warranty, installation, recommended use, or other product attributes that are not specifically addressed herein.

Entity	Report No.	Standard
FM Approvals (TST1867)	3057888	FM 4470 (2016)
FM Approvals (TST1867)	3059661	FM 4470 (2016)
FM Approvals (TST1867)	3063320	FM 4470 (2016)
FM Approvals (TST1867)	PR451820	FM 4470 (2016)

LIMITATIONS

1. Fire classification is not within the scope of this evaluation.
2. The roof deck and the roof deck attachment information are provided based on testing. FBC requirements for the rational design of the roof deck, including the attachment, are not within the scope of this evaluation.
3. Foam plastic insulation shall be installed in accordance with the FBC Section 2603.4 and 2603.6.
4. In the HVHZ, fastener spacing for insulation attachment is determined using a Minimum Characteristic Force (F') of 275 lbf as demonstrated via testing to TAS 105. If the field tested fastener value is below 275 lbf, then insulation attachment shall not be acceptable.
5. In the HVHZ, fastener spacing for base sheets or membrane attachment shall meet the minimum fastener resistance value and the *MDP* for the specified roof system. It is permissible for a qualified professional to submit a revised fastener spacing utilizing the withdrawal resistance value obtained from TAS 105 testing and calculations performed in accordance with RAS 117 and/or RAS 137, when the fastener resistance is found less than required.
6. In the HVHZ, if mechanical attachment through the lightweight insulating concrete to the structural deck is proposed, a field fastener withdrawal test shall be conducted in compliance with TAS 105 to determine equivalent or increased attachment densities. Revised fastener densities shall be submitted utilizing the withdrawal resistance value obtained from TAS 105 testing and calculations performed in accordance with RAS 117 and/or RAS 137.
7. **HVHZ:** For assemblies containing mechanical attachment, the allowable uplift pressure for the selected assembly shall meet or exceed the minimum design loads as determined in accordance with the FBC Chapter 16. The attachment density may be increased by a qualified design professional, as necessary, to meet the design pressure requirements in the periphery zones. Calculations shall be conducted in compliance with RAS 117 and/or RAS 137.
8. **Non-HVHZ:** For assemblies containing mechanical attachment or adhered in ribbon-applied adhesive, the allowable uplift pressure for the selected assembly shall meet or exceed the minimum design loads as determined in accordance with the FBC Chapter 16. The attachment density may be increased by a qualified design professional, as necessary, to meet the design pressure requirements in the periphery zones. Calculations shall be conducted in compliance with RAS 117, RAS 137, or Section 2.2.10.1 FM LPDS 1-29 (February 2020). Reroofing applications shall be examined in accordance with FBC Section 1511 outside of the HVHZ and FBC Section 1521 within the HVHZ. For mechanically fastened roof systems, a field withdrawal resistance test (TAS 105 in the HVHZ; ANSI/SPRI FX-1 or TAS 105 in the non-HVHZ) shall be conducted by a qualified professional to ensure the fastener meets the minimum design load requirements of the roof system. For adhered roof systems, a field uplift resistance test (TAS 124 in the HVHZ; ASTM E 907, FM LPDS 1-52, ANSI/SPRI IA-1, or TAS 124 in the non-HVHZ) shall be conducted to confirm conformance of the existing to the minimum design loads.
9. **HVHZ:** For assemblies containing fully adhered or ribbon adhered attachment, or where extrapolation of the assembly is not permitted, the MDP for the selected assembly shall meet or exceed the minimum design loads as determined in accordance with the FBC Chapter 16 without augmentation.
10. **Non-HVHZ:** For assemblies adhered in ribbon-applied adhesive, the allowable uplift pressure for the selected assembly shall meet or exceed the minimum design loads as determined in accordance with the FBC Chapter 16. The attachment density may be increased by a qualified design professional, as necessary, to meet the design pressure requirements in the periphery zones. Calculations shall be conducted in compliance with Section 2.2.10.1 FM LPDS 1-29 (February 2020). Installation of the evaluated products shall comply with this report, the FBC, and the manufacturer's published application instructions. Where discrepancies exist between these sources, the more restrictive and FBC compliant installation detail shall prevail.
11. The minimum roof slope shall be 1/4:12 for new construction.
12. All products listed in this report shall be manufactured under a quality assurance program in compliance with Rule 61G20-3.
13. Fasteners applied in rows may impart concentrated loads to structural components of the building. Designers should consider the fastener spacing of the roof system in relation to the spacing of structural supports when selecting a roof system.

This evaluation report is provided for State of Florida product approval under Rule 61G20-3. The manufacturer shall notify CREEK Technical Services, LLC of any product changes or quality assurance changes throughout the duration for which this report is valid. This evaluation report does not express nor imply warranty, installation, recommended use, or other product attributes that are not specifically addressed herein.

COMPLIANCE STATEMENT

The products evaluated herein by Zachary R. Priest, P.E. have demonstrated compliance with the Florida Building Code, 8th Edition (2023) including High-Velocity Hurricane Zones (HVHZ) as evidenced in the referenced documents submitted by the named manufacturer.

ZACHARY R. PRIEST
LICENSE
No 74021
STATE OF
FLORIDA
PROFESSIONAL ENGINEER

This item has been digitally signed and sealed by Zachary R. Priest, PE, on 8/8/2023.

Printed copies of this document are not considered signed and sealed and the signature must be verified on any electronic copies.

Digitally signed by Zachary R. Priest
CREEK Technical Services, LLC

2023.08.08
14:40:12
-04'00'

Zachary R. Priest, P.E.
Florida Registration No. 74021
Organization No. ANE9641

CERTIFICATION OF INDEPENDENCE

CREEK Technical Services, LLC does not have, nor will it acquire, a financial interest in any company manufacturing or distributing products under this evaluation.

CREEK Technical Services, LLC is not owned, operated, or controlled by any company manufacturing or distributing products under this evaluation.

Zachary R. Priest, P.E. does not have, nor will acquire, a financial interest in any company manufacturing or distributing products under this evaluation.

Zachary R. Priest, P.E. does not have, nor will acquire, a financial interest in any other entity involved in the approval process of the product.

APPENDICES

1) APPENDIX A – Installation (9 pages)
2) APPENDIX B – Nomenclature and Approved Assemblies (43 pages)

This evaluation report is provided for State of Florida product approval under Rule 61G20-3. The manufacturer shall notify CREEK Technical Services, LLC of any product changes or quality assurance changes throughout the duration for which this report is valid. This evaluation report does not express nor imply warranty, installation, recommended use, or other product attributes that are not specifically addressed herein.

INSTALLATION

Note - Refer to the ***APPROVED ASSEMBLIES*** *section of this report for specific installation details of a selected roof system.*

Unless otherwise specified in this report the following installation details shall be met for the named products:

Component	Product	Installation Detail
Fasteners & Plates	OMG RhinoBond Insulation Plate (PVC)	3-inch induction welding plate for PVC membranes; welds not permitted at lap seams
	OMG XHD Fastener	#15 screw; Min. 3/4-inch penetration through the top rib of the steel deck or through wood deck
	SENTINEL® isoweld Plate	Min. 3-inch diameter steel, induction weld plate
	PERLOK Fluted Nail Concrete Fastener	Pre-drill a 3/16-inch hole a minimum 1/2-inch deeper than fastener embedment; install fastener to a minimum embedment of 1-inch
	PERLOK #14 HD Fastener	#14 screw; Min. 1-inch penetration into No. 2 wood truss or concrete deck; Min. 3/4-inch penetration through the top rib of the steel deck or through wood deck
	PERLOK #14 HDB-SS Fastener	
	SOPREMA® #14 Fastener	
	PERLOK #15 EHDFastener	#15 screw; Min. 3/4-inch penetration through the top rib of the steel deck or through wood deck; Min. 1-inch penetration into concrete deck for SOPRMA® #15 Fastener only
	SOPREMA® #15 Fastener	
	PERLOK 2.4" Seam Plate	Min. 2 3/8-inch diameter, 0.035-inch thick steel plate with cleats
	PERLOK 3" Metal Insulation Plate	Min. 3-inch diameter steel plate
	PERLOK #12 DP Fastener	#12 screw; Min. 3/4-inch penetration through the top rib of the steel deck
	SOPREMA® #12 Fastener	
	TRUFAST #12 Purlin Fastener	Min. 3/4-inch penetration through min. 16 ga. and max. 3/16-inch steel purlins
	PERLOK Induction Weld Plate	Min. 3-inch diameter steel, induction weld plate
	PERLOK VERSA-FAST Plate	3-inch diameter; 0.017-inch thick Galvalume steel plate with one (1) center hole and eight (8) equally spaced perimeter holes for multiple fastening
	PERLOK VERSA-FAST Fastener	Min. 2-inch embedment into LWIC or Gypsum decks; Min. 3/4-inch penetration through wood decks
Insulation/Cover Boards	Derbiboard	Min. 0.5-inch thick; Min. 20 psi polyisocyanurate board with various facers; Adhered boards shall be a maximum 4-ft x 4-ft
	Derbiboard CA	
	Atlas ACFoam-IV	
	Atlas ACFoam HS	
	Derbiboard H	
	Hunter H-Shield CG	
	Hunter H-Shield HD	
	Rmax Multi-Max FA-3	
	Rmax Ultra-Max	
	SOPREMA® SOPRA-ISO H r	
	SOPREMA® SOPRA-ISO r	
	SOPREMA® SOPRA-ISO+ r	
	SOPREMA® SOPRA-ISO H+ s	

This evaluation report is provided for State of Florida product approval under Rule 61G20-3. The manufacturer shall notify CREEK Technical Services, LLC of any product changes or quality assurance changes throughout the duration for which this report is valid. This evaluation report does not express nor imply warranty, installation, recommended use, or other product attributes that are not specifically addressed herein.

Component	Product	Installation Detail
Insulation/Cover Boards (Cont'd)	SOPREMA® SOPRA-ISO s	Min. 0.5-inch thick; Min. 90 psi polyisocyanurate board with coated fiberglass facers; Adhered boards shall be a maximum 4-ft x 4-ft
	SOPREMA® SOPRA-ISO+ s	
	SOPREMA® SOPRA-ISO x	
	SOPREMA® SOPRA-ISO+ x	
	DEXcell Glass Mat Roof Board	Min. 0.25-inch thick gypsum roof board with fiberglass facer
	DEXcell FA Glass Mat Roof Board	
	Georgia-Pacific DensDeck	
	Georgia-Pacific DensDeck Prime	Min. 0.25-inch thick gypsum roof board with fiberglass facer
	SOPREMA® SOPRABOARD	Min. 0.125-inch thick asphaltic board
	USG SECUROCK Gypsum-Fiber Roof Board	Min. 0.25-inch thick gypsum roof board with fiber reinforcement
	DEXcell Cement Roof Board	Min. 7/16-inch thick cement roof board with glass mesh; Adhered boards shall be a maximum 4-ft x 4-ft
	EPS	Min. 0.5-inch, min. 1.8 pcf EPS (HVHZ) or min. 1.5 pcf EPS (non-HVHZ); Adhered boards shall be a maximum 4-ft x 4-ft
Insulation Adhesive	ICP Adhesives CR-20	Applied in 3/4 to 1-inch wide ribbons
	DOW Insta Stik	
	OlyBond Classic	
	OMG OlyBond 500	
	SOPREMA® DUOTACK®	Apply in 1/2 to 3/4-inch wide ribbons
	SOPREMA® DUOTACK® 365	
	SOPREMA® High Velocity Insulation Adhesive III	
	SOPREMA® DUOTACK® SPF	Apply in 2.5-inch wide ribbons
Primers	SOPREMA® ELASTOCOL 500	Applied at a rate of 200-ft^2/gal
	SOPREMA® ELASTOCOL Stick	
	Derbibase SA Primer	
Membrane Adhesive	ICP Adhesives CR-20	Fleeceback products only; Apply in "spatter pattern" at a rate of 3.5 lbs/100-ft^2
	ASTM D 312, Type IV Asphalt	Fully adhered within the EVT range at a rate of 25-40 lbs/100 ft^2
	SOPREMA® COLPLY	Fully adhered at a rate of 50.0-66.6 ft^2/gal.
	SOPREMA® COLPLY EF	
	SOPREMA® COLPLY Modified Adhesive	
	SOPREMA® DUOTACK® SPF	Fleeceback products only; Apply in "spatter pattern" at a rate of 2.5-3.7 lbs/100-ft^2
	SOPREMA® SENTINEL® S Bonding Adhesive	Smooth products only; Fully adhere at a combined rate 60-ft^2/gal (Apply 120-ft^2/gal to both membrane and substrate). Coverage will vary depending on porosity of substrate.
	SOPREMA® SENTINEL® H2O Bonding Adhesive	Smooth products only; Fully adhere at a rate of 140-ft^2/gal to substrate only. Coverage will vary depending on porosity of substrate.
Single-Ply Membrane	SOPREMA® SENTINEL® G150	For use in fully adhered systems only; 3-inch lap with min. 1.5-inch welded lap seam;
	SOPREMA® SENTINEL® G200	

This evaluation report is provided for State of Florida product approval under Rule 61G20-3. The manufacturer shall notify CREEK Technical Services, LLC of any product changes or quality assurance changes throughout the duration for which this report is valid. This evaluation report does not express nor imply warranty, installation, recommended use, or other product attributes that are not specifically addressed herein.

Component	Product	Installation Detail
Single-Ply Membrane (Cont'd)	SOPREMA® SENTINEL® P150	Min. 4-inch lap for mechanically fastened systems and min. 3-inch lap for adhered systems with min. 1.5-inch welded lap seam; Side-laps shall be installed parallel to the direction of the wood trusses for mechanically attached systems over wood decks; Side-laps shall be installed perpendicular to the direction of the steel deck ribs for mechanically attached systems over steel deck.
	SOPREMA® SENTINEL® P200	
	SOPREMA® SENTINEL® P150 HFB	
	SOPREMA® SENTINEL® P200 HFB	
Vapor Retarder/ SBS sheets	SOPREMA® COLPHENE 180 SP 3.5	Min. 3-inch side-laps; Min. 6-inch end-laps
	SOPREMA® COLPHENE SP 2.2	
	SOPREMA® COLPHENE SP 3.0	
	SOPREMA® COLVENT 180 TG	
	SOPREMA® COLVENT TG	
	SOPREMA® ELASTOPHENE 180 PS	
	SOPREMA® ELASTOPHENE 180 PS 2.2	
	SOPREMA® ELASTOPHENE 180 Sanded	
	SOPREMA® ELASTOPHENE Flam	
	SOPREMA® ELASTOPHENE Flam 2.2	
	SOPREMA® ELASTOPHENE Flam HS	
	SOPREMA® ELASTOPHENE Flam FR GR	
	SOPREMA® ELASTOPHENE Flam LS FR GR	
	SOPREMA® ELASTOPHENE FR GR	
	SOPREMA® ELASTOPHENE HS	
	SOPREMA® ELASTOPHENE HS Sanded	
	SOPREMA® ELASTOPHENE HS 62	
	SOPREMA® ELASTOPHENE LS FR GR	
	SOPREMA® ELASTOPHENE PS	
	SOPREMA® ELASTOPHENE Sanded	
	SOPREMA® ELASTOPHENE Sanded 3.0	
	SOPREMA® ELASTOPHENE Sanded FR	
	SOPREMA® ELASTOPHENE SP 2.2	
	SOPREMA® ELASTOPHENE SP 3.0	
	SOPREMA® ELASTOPHENE Stick FR GR	
	SOPREMA® ELASTOPHENE Stick HR FR GR	
	SOPREMA® Modified SOPRA G	
	SOPREMA® SOPRA IV	
	SOPREMA® SOPRA VI	
	SOPREMA® SOPRA G	
	SOPREMA® SOPRABASE	
	SOPREMA® SOPRABASE S	
	SOPREMA® SOPRALENE® 180 Sanded	
	SOPREMA® SOPRALENE® 180 Sanded 2.2	
	SOPREMA® SOPRALENE® 180 FR GR	
	SOPREMA® SOPRALENE® 180 SP 3.0	
	SOPREMA® SOPRALENE® 180 SP 3.5	
	SOPREMA® SOPRALENE® 250 FR GR	

This evaluation report is provided for State of Florida product approval under Rule 61G20-3. The manufacturer shall notify CREEK Technical Services, LLC of any product changes or quality assurance changes throughout the duration for which this report is valid. This evaluation report does not express nor imply warranty, installation, recommended use, or other product attributes that are not specifically addressed herein.

Component	Product	Installation Detail
Vapor Retarder/ SBS sheets (Cont'd)	SOPREMA® SOPRALENE® 250 GR	Min. 3-inch side-laps; Min. 6-inch end-laps
	SOPREMA® SOPRALENE® 250 Sanded	
	SOPREMA® SOPRALENE® 250 SP	
	SOPREMA® SOPRALENE® Flam 180	
	SOPREMA® SOPRALENE® Flam 180 FR GR	
	SOPREMA® SOPRALENE® Flam 250	
	Derbistick SA	
	Derbibase SA	
	Derbibase SA Ultra	
Cellular Lightweight Concrete	Celcore S-1	Deck is treated by applying a continuous film with a broom prior to placement of the Celcore lightweight concrete
	Min. 300 psi Celcore MF with HS Rheology Admixture	Installed over min. 22 ga., 0.5% vented, B-Deck; Slurry coat min. 1/8-inch thick; 1-inch thick EPS board (1 lbs/ft^3); Min. 2-inch thick top coat; Celcore PVA curing compound applied at rate of 300 ft^2/gal
	Min. 300 psi Elastizell with Zell-Crete Fibers	Slurry coat min. 1/4-inch thick; Min. 1-inch thick EPS board (1 lbs/ft^3); Min. 2-inch top coat;
	Min. 225 psi Cellular Lightweight Concrete	

Insulation/Cover Board Fastening Patterns	
Description	Fastening Pattern
6 per 4 ft x 8 ft board	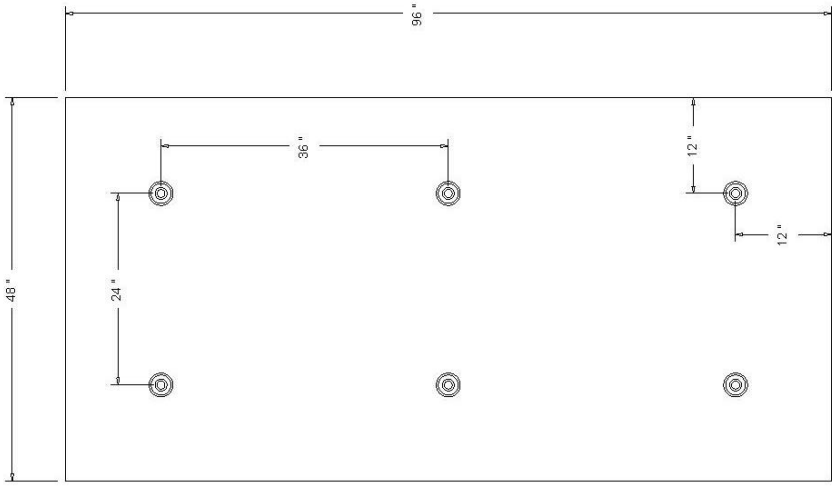 (Max. 6ft^2 contributory area per fastener)

This evaluation report is provided for State of Florida product approval under Rule 61G20-3. The manufacturer shall notify CREEK Technical Services, LLC of any product changes or quality assurance changes throughout the duration for which this report is valid. This evaluation report does not express nor imply warranty, installation, recommended use, or other product attributes that are not specifically addressed herein.

Insulation/Cover Board Fastening Patterns	
Description	Fastening Pattern
8 per 4 ft x 8 ft board	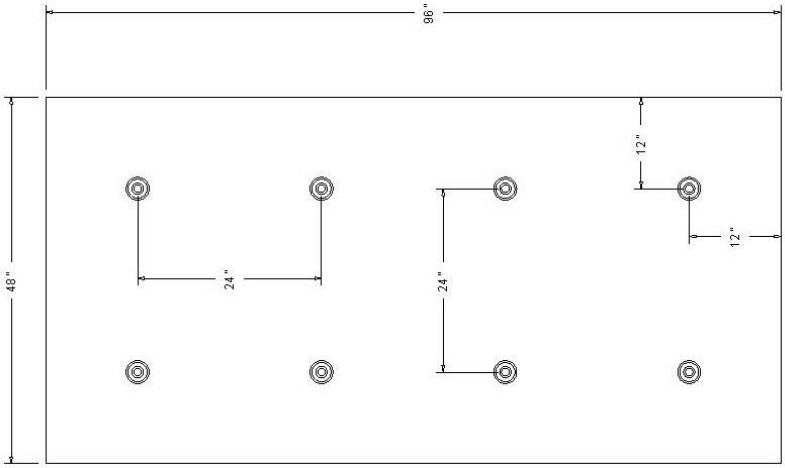 (Max. 4.00ft^2 contributory area per fastener)
12 per 4 ft x 8 ft board	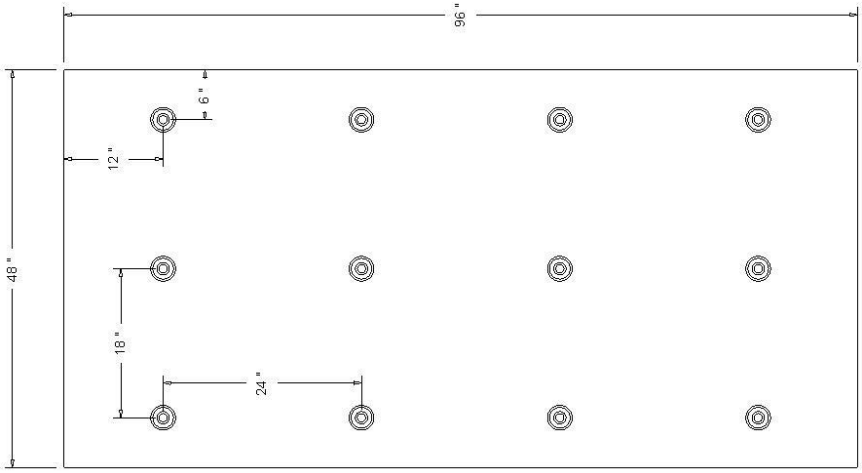 (Max. 2.67ft^2 contributory area per fastener)
16 per 4 ft x 8 ft board	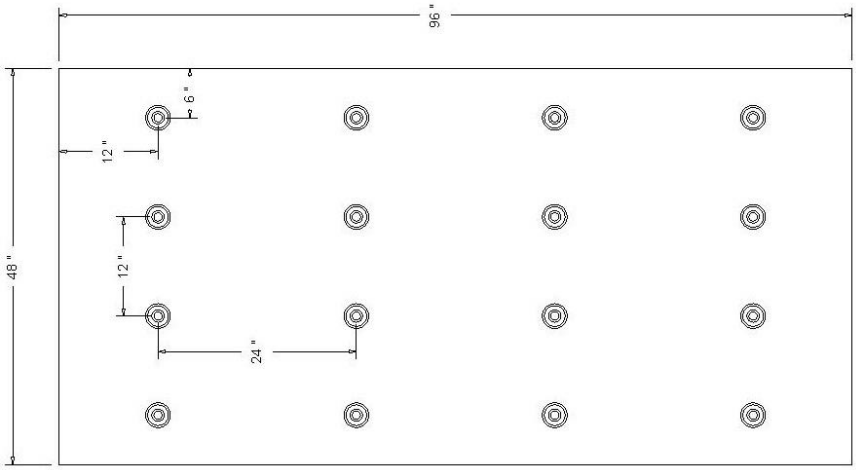 (Max. 2.0ft^2 contributory area per fastener)

This evaluation report is provided for State of Florida product approval under Rule 61G20-3. The manufacturer shall notify CREEK Technical Services, LLC of any product changes or quality assurance changes throughout the duration for which this report is valid. This evaluation report does not express nor imply warranty, installation, recommended use, or other product attributes that are not specifically addressed herein.

Insulation/Cover Board Fastening Patterns	
Description	Fastening Pattern
18 per 4 ft x 8 ft board	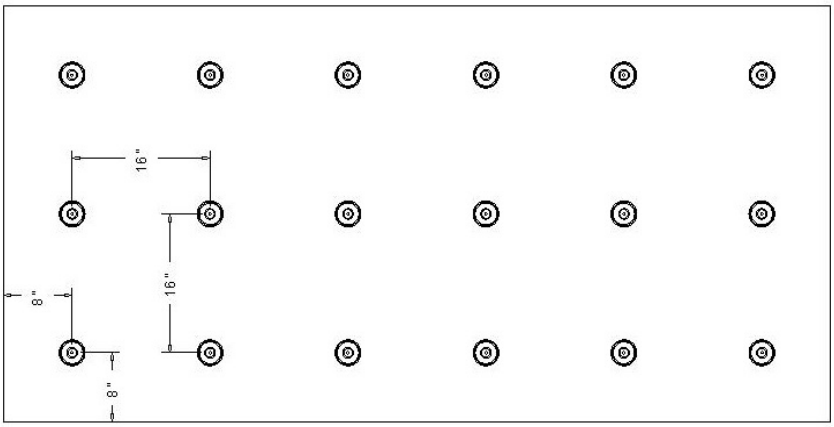 (Max. 1.78ft^2 contributory area per fastener)
20 per 4 ft x 8 ft board	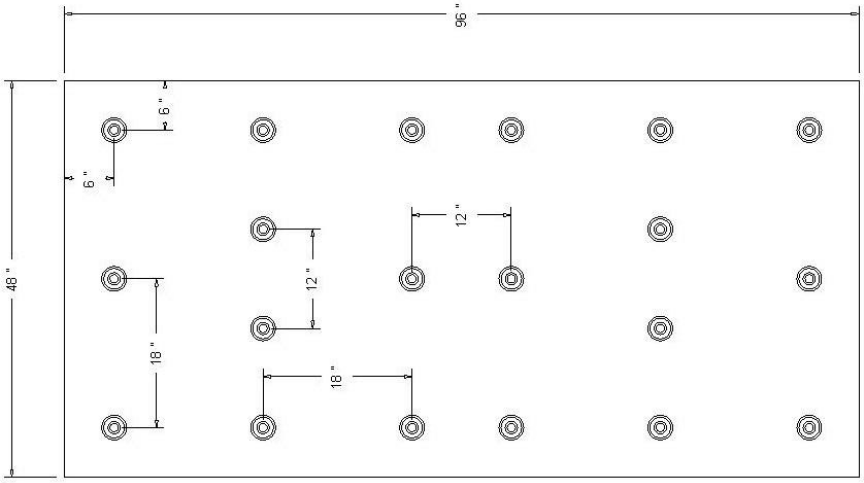 (Max. 1.6ft^2 contributory area per fastener)
24 per 4 ft x 8 ft board	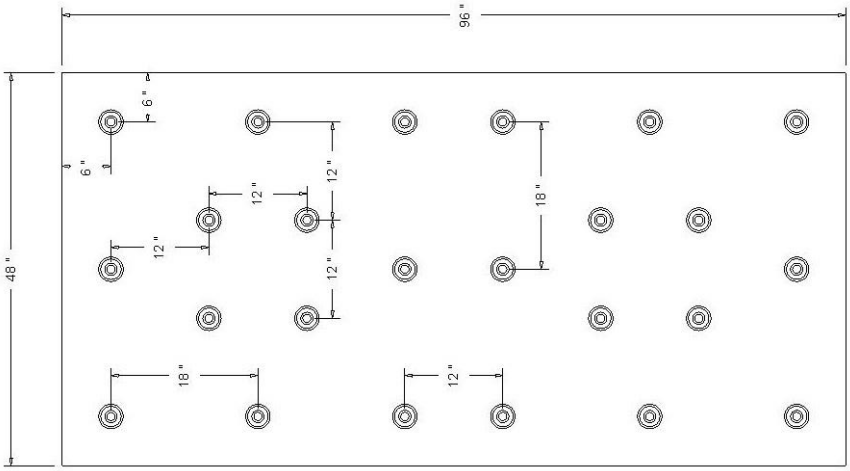 (Max. 1.33ft^2 contributory area per fastener)

This evaluation report is provided for State of Florida product approval under Rule 61G20-3. The manufacturer shall notify CREEK Technical Services, LLC of any product changes or quality assurance changes throughout the duration for which this report is valid. This evaluation report does not express nor imply warranty, installation, recommended use, or other product attributes that are not specifically addressed herein.

Insulation/Cover Board Fastening Patterns	
Description	Fastening Pattern
32 per 4 ft x 8 ft board	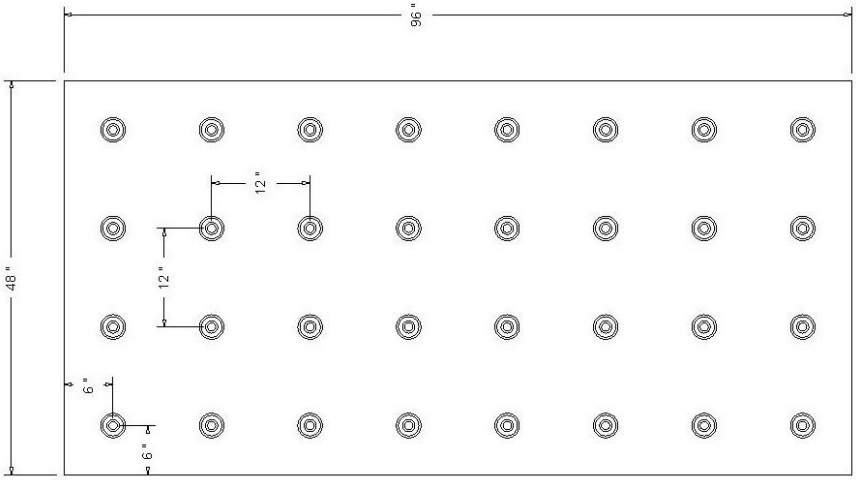 (Max. 1.0ft^2 contributory area per fastener)

VERSA-FAST Metal plate Fastening Pattern	
Description	**Fastening Pattern**
1 fastener per plate	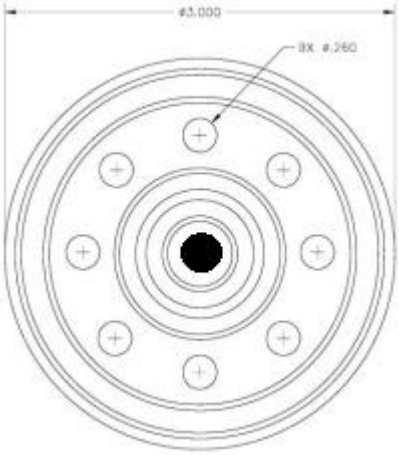
2 fasteners per plate	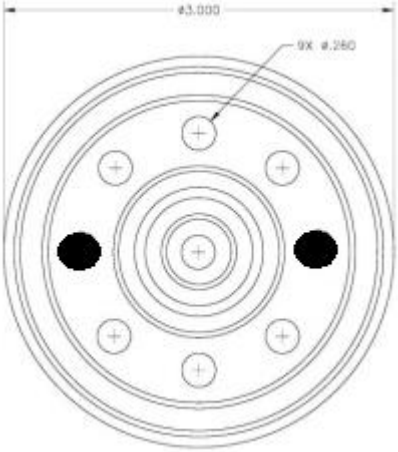

This evaluation report is provided for State of Florida product approval under Rule 61G20-3. The manufacturer shall notify CREEK Technical Services, LLC of any product changes or quality assurance changes throughout the duration for which this report is valid. This evaluation report does not express nor imply warranty, installation, recommended use, or other product attributes that are not specifically addressed herein.

Induction Weld Patterns	
Description	Fastening Array Repeated Using the Geometric Grid Shown Below
1 per 3.00-ft^2	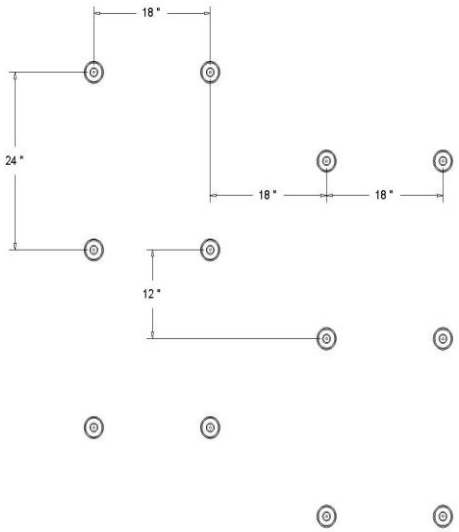
1 per 4.00-ft^2	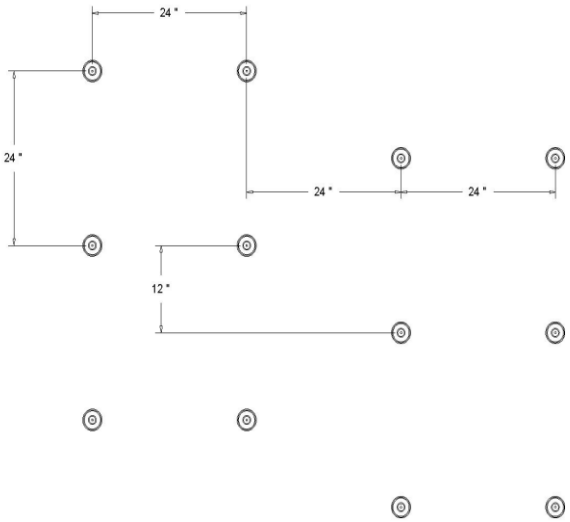

This evaluation report is provided for State of Florida product approval under Rule 61G20-3. The manufacturer shall notify CREEK Technical Services, LLC of any product changes or quality assurance changes throughout the duration for which this report is valid. This evaluation report does not express nor imply warranty, installation, recommended use, or other product attributes that are not specifically addressed herein.

Induction Weld Patterns	
Description	Fastening Array Repeated Using the Geometric Grid Shown Below
1 per 6.00-ft^2	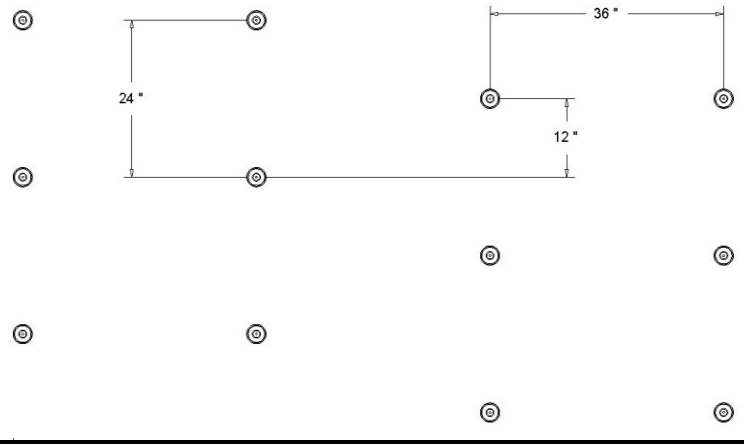

This evaluation report is provided for State of Florida product approval under Rule 61G20-3. The manufacturer shall notify CREEK Technical Services, LLC of any product changes or quality assurance changes throughout the duration for which this report is valid. This evaluation report does not express nor imply warranty, installation, recommended use, or other product attributes that are not specifically addressed herein.

NOMENCLATURE

The following naming conventions are utilized to specify products in the **APPROVED ASSEMBLIES** section of this report. Refer to the nomenclature below when deciphering the allowable products for use in the selected roof system. Installation requirements shall be as noted in the **APPROVED ASSEMBLIES** and **INSTALLATION** section of this report.

Name	Definition		
#12 isoweld	SOPREMA® #12 Fastener and SENTINEL® isoweld Plate		
#14 MP Fastener	PERLOK #14 HD		
#14 isoweld	SOPREMA® #14 Fastener and SENTINEL® isoweld Plate		
#15 isoweld	SOPREMA® #15 Fastener and SENTINEL® isoweld Plate		
#15 Fastener	PERLOK #15 EHD Fastener		
Approved Insulation	One or more layers or combinations of roofing insulation listed in this report or *approved* under rule 61G20-3, such as gypsum, perlite, polyisocyanurate, polystyrene, or wood fiberboard. Insulation shall be preliminarily secured unless otherwise noted.		
As Tested	Information provided to the report user based on the as tested condition of the roof system		
CR-20	ICP Adhesives CR-20		
Deck Detail	All decks shall be designed by others in accordance with FBC requirements. *As Tested* deck construction details are described as follows:		
	Concrete Deck	Min. f'_c = 2,500 psi at 28 days	
	CWF Deck	Min. 2.5-inch thick Tectum I cementitious wood fiber panels	
	Steel Deck	Min. 22 ga (F_y = min.40 ksi) Wide Rib Deck (Type WR) conforming to ANSI/SDI-RD1.0 & FBC; 0.5% Vented for LWIC applications only. The following nomenclature is used to further describe the *As Tested* condition:	
		F<#>	Number <#> #12-24 HWH self-drilling screws or equivalent fastener at each flute used to secure the deck to the structural supports; Min. 1/4-inch penetration
		G<#>	Min. Grade <#> of *Steel Deck*
		L<#>	Max. span of <#> ft
		P	Min. 5/8-inch diameter puddle welds at each flute used to secure the deck to the structural supports
		S<#>	1/4 ”-14 HWH x7/8” self-drilling screws or equivalent fastener secured <#>-inch o.c. along the panel side laps
		W	3/4-inch O.D. flat washer used with indicated fastener

This evaluation report is provided for State of Florida product approval under Rule 61G20-3. The manufacturer shall notify CREEK Technical Services, LLC of any product changes or quality assurance changes throughout the duration for which this report is valid. This evaluation report does not express nor imply warranty, installation, recommended use, or other product attributes that are not specifically addressed herein.

Name	Definition		
Deck Detail (Cont'd)	*Wood Deck*	**HVHZ:** Min. 19/32-inch thick, 40/20 span rated, CDX plywood or Min. 15/32-inch 32/16 span rated, CDX plywood sheathing, or wood plank. The following nomenclature is used to further describe the *As Tested* condition:	
		T<#>P	Min. <#>-inch thickness of the plywood or wood plank
		T<#>O	Min. <#>-inch thickness of the OSB
		L<#>	Max. span of <#> inches
		0.113-<#1>/<#2>	0.113-inch x 2-3/8-inch ring shank nails; Secured <#1> of fasteners at all intermediate supports and at the number <#2> of fasteners at the perimeter of each board
		8d-<#1>/<#2>	8d ring shank nails; Number <#1> of fasteners at all intermediate supports and at the number <#2> of fasteners at the perimeter of each board
		Hex-<#1>/<#2>	1/4-inch x 2-inch hex wood screws; Number <#1> of fasteners at all intermediate supports and at the number <#2> of fasteners at the perimeter of each board
		#8-<#1>/<#2>	#8 x 1.5-inch deck screws; Number <#1> of fasteners at all intermediate supports and at the number <#2> of fasteners at the perimeter of each board
		#10-<#1>/<#2>	#10 x 3-inch wood screws; Number <#1> of fasteners at all intermediate supports and at the number <#2> of fasteners at the perimeter of each board
D-SPF	SOPREMA® DUOTACK® SPF		
DD	Min. 1/4-inch thickness Georgia-Pacific DensDeck		
DDP	Min. 1/4-inch thickness Georgia-Pacific DensDeck Prime		
DOW-IS	DOW Insta Stik		
Duotack	SOPREMA® DUOTACK® , SOPREMA® DUOTACK® 365, or SOPREMA® DUOTACK® SPF		
DX	DEXcell Glass Mat Roof Board		
DXF	DEXcell FA Glass Mat Roof Board		
DXC	DEXcell Cement Roof Board		
EPS	Min. 0.5-inch thick Expanded Polystyrene Insulation Board; Min. 1.8 pcf in th HVHZ; min. 1.5 pcf in the non-HVHZ		
H2O BA	SENTINEL® H2O Bonding Adhesive		
HVIA-III	High Velocity Insulation Adhesive III		
ISO HD-A	Atlas ACFoam HS		
ISO HD-H	Hunter H-Shield HD		
ISO H+ s	SOPRA-ISO H+ s or Atlas ACFoam-IV		
ISO s	SOPRA-ISO s or Derbiboard		
ISO+ s	SOPRA-ISO+ s or Derbiboard CA		
ISO r	SOPRA-ISO r or Derbiboard H		

This evaluation report is provided for State of Florida product approval under Rule 61G20-3. The manufacturer shall notify CREEK Technical Services, LLC of any product changes or quality assurance changes throughout the duration for which this report is valid. This evaluation report does not express nor imply warranty, installation, recommended use, or other product attributes that are not specifically addressed herein.

Name	Definition
ISO+ r	SOPRA-ISO+ r or Hunter H-Shield CG
ISO x	SOPRA-ISO x or Multi-Max FA-3
ISO+ x	SOPRA-ISO+ x or Ultra-Max
ISO-II	One or more layers of the following products: Derbiboard H, Derbiboard, Multi-Max FA-3, Ultra-Max, SOPRA-ISO r, SOPRA-ISO s, SOPRA-ISO x, or SOPRA-ISO+ x
LWIC	Poured-in-place; Cellular Lightweight Concrete with encapsulated insulation board composed of min. 1/4-inch slurry coat, min. 1-inch EPS holey board, and min. 2-inch top coat
MCRF	Minimum Characteristic Resistance Force as determined in accordance with TAS 105.
MDP	Maximum Design Pressure
OB500	OMG OlyBond 500
Recover	Where assemblies are used to recover an existing roof, the existing roof shall consist of only one layer of roofing, i.e. recovering a previously recovered roof is not permitted. Recover roofing shall be conducted in compliance with FBC Section 1511 outside of the HVHZ and FBC Section 1521 within the HVHZ. For mechanically fastened assemblies, the existing roof insulation thickness may be contributory in meeting the minimum insulation thickness requirements for a given roof system.
RhinoBond	OMG RhinoBond Insulation Plate (PVC) with PERLOK #15 EHD Fastener for *Wood Decks* or *Steel Decks*
S BA	SENTINEL® S Bonding Adhesive
S Plates & #12 Fasteners	-PERLOK 3" Metal Plates and PERLOK #12 DP Fastener for *Steel Decks* or *Wood Decks* -PERLOK 3" Metal Plates and SOPREMA® #12 Fastener for *Steel Decks* or *Wood Decks*
S Plates & #15 Fasteners	PERLOK 3" Metal Plates and PERLOK #15 EHD Fastener for *Steel Decks* or *Wood Decks*
S Plates & Fasteners	- PERLOK 3" Metal Plates and PERLOK #14 HD Fastener for *Steel Decks* or *Wood Decks* - PERLOK 3" Metal Plates and PERLOK #14 HDFastener or PERLOK Fluted Nail Concrete Fastener for *Concrete Decks*
Sentinel	One ply of any one of the following products: SENTINEL® G150 or G200 for fully adhered applications only, or SENTINEL® P150 or SENTINEL® P200 membranes as stated in the approved assembly
Sentinel HFB	One ply of any one of the following products: SENTINEL® P150 HFB or SENTINEL® P200 HFB membranes
SB	SOPRABOARD
SR	USG SECUROCK gypsum-fiber roof board, Min. 1/4-inch thickness
SENTINEL PVC IW	SENTINEL PVC IW plates with PERLOK #15 EHD Fastener (steel decks only), PERLOK #14 HD Fastener (concrete decks only), or PERLOK Fluted Nail Concrete Fastener (concrete decks only)
VERSA-FAST	PERLOK VERSA-FAST Plates and Fasteners
VR BUR	Two or more plies of the following in hot asphalt over substrate primed with ASTM D41 primer: Sopra IV, Sopra VI, Modified Sopra G, Sopra G or Soprabase
VR CV	One ply of any one of the following products fully torch adhered over substrate primed with ELASTOCOL 500: COLVENT TG or COLVENT 180 TG

This evaluation report is provided for State of Florida product approval under Rule 61G20-3. The manufacturer shall notify CREEK Technical Services, LLC of any product changes or quality assurance changes throughout the duration for which this report is valid. This evaluation report does not express nor imply warranty, installation, recommended use, or other product attributes that are not specifically addressed herein.

Name	Definition
VR EF	One or two plies of the following products fully adhered in COLPLY EF Adhesive with optional ASTM D 41 primer: ELASTOPHENE Sanded, ELASTOPHENE Sanded 3.0, ELASTOPHENE 180 Sanded, ELASTOPHENE HS 62, ELASTOPHENE HS Sanded, SOPRABASE S, SOPRALENE® 180 Sanded, SOPRALENE® 180 Sanded 2.2 or SOPRALENE® 250 Sanded
VR EF Cap	One ply of the following products fully adhered in COLPLY EF Adhesive with optional ASTM D 41 primer: ELASTOPHENE FR GR, ELASTOPHENE LS FR GR, SOPRALENE® 180 FR GR, SOPRALENE® 250 GR or SOPRALENE® 250 FR GR OPTIONAL – prior to application of cap ply, one ply of ELASTOPHENE SP 2.2, ELASTOPHENE SP 3.0, SOPRALENE® 250 SP or SOPRALENE® 180 SP 3.5 torch applied, or ELASTOPHENE Sanded, ELASTOPHENE HS, ELASTOPHENE 180 Sanded, SOPRALENE® 180 Sanded, SOPRALENE® 180 Sanded 2.2, or SOPRALENE® 250 Sanded applied in hot asphalt, or COLPLY EF Adhesive. Where COLPLY EF Adhesive is used, priming the substrate is optional
VR EF RA I	One ply of the following products ribbon adhered in COLPLY EF Adhesive (0.5-inch wide ribbons spaced maximum 12-inch o.c.): SOPRALENE® 180 Sanded or SOPRALENE® 250 Sanded
VR EF RA II	Two plies of the following products in COLPLY EF Adhesive (Base ply shall be applied 0.5-inch wide ribbons spaced maximum 12-inch o.c. and top ply shall be fully adhered at 1.5-2.0 gal/100ft^2): Top ply – ELASTOPHENE Sanded, SOPRALENE® 180 Sanded, SOPRALENE® 250 Sanded, ELASTOPHENE HS, or ELASTOPHENE HS 62 Base Ply – SOPRALENE® 180 Sanded or SOPRALENE® 250 Sanded
VR HA	One or two plies of the following products fully adhered in hot asphalt with optional ELASTOCOL 500 or ASTM D 41 primer: ELASTOPHENE Sanded, ELASTOPHENE 180 Sanded, SOPRALENE® 180 Sanded, SOPRALENE® 250 Sanded 2.2, or SOPRALENE® 250 Sanded or ELASTOPHENE HS
VR HA Cap	One ply of any one of the following products adhered in hot asphalt over substrate primed with ELASTOCOL 500 or ASTM D 41 Primer: ELASTOPHENE FR GR, ELASTOPHENE LS FR GR, SOPRALENE® 180 FR GR, SOPRALENE® 250 GR or SOPRALENE® 250 FR GR OPTIONAL – prior to application of cap ply, one ply of ELASTOPHENE SP 2.2, ELASTOPHENE SP 3.0, SOPRALENE® 250 SP or SOPRALENE® 180 SP 3.5 torch applied, or ELASTOPHENE Sanded, ELASTOPHENE HS, ELASTOPHENE 180 Sanded, SOPRALENE® 180 Sanded, SOPRALENE® 180 Sanded 2.2, or SOPRALENE® 250 Sanded applied in hot asphalt, or COLPLY EF Adhesive. Where COLPLY EF Adhesive is used, priming the substrate is optional
VR SA	One or two plies of any one of the following products fully self-adhered over substrate primed with Derbibase SA Primer or ELASTOCOL Stick: Derbibase SA or Derbibase SA Ultra
VR SA Cap	One ply of any one of the following products fully self-adhered over substrate primed with Derbibase SA Primer or ELASTOCOL Stick: ELASTOPHENE Stick FR GR or ELASTOPHENE Stick HR FR GR OPTIONAL – prior to application of cap ply, one ply of ELASTOPHENE SP 2.2, ELASTOPHENE SP 3.0, SOPRALENE® 250 SP or SOPRALENE® 180 SP 3.5 torch applied, or ELASTOPHENE Sanded, ELASTOPHENE HS, ELASTOPHENE 180 Sanded, SOPRALENE® 180 Sanded, SOPRALENE® 180 Sanded 2.2, or SOPRALENE® 250 Sanded applied in hot asphalt, or COLPLY EF Adhesive. Where COLPLY EF Adhesive is used, priming the substrate is optional
VR SV	One ply of any one of the following products fully self-adhered over a substrate primed with Derbibase SA Primer: Derbistick SA
VR TA	One ply of any one of the following products fully torch adhered or optional two ply where the base ply is SOPREMA® Flam fully torch adhered over substrate primed with ELASTOCOL 500 or ASTM D 41 Primer: COLPHENE 180 SP 3.5, COLPHENE SP 2.2, COLPHENE SP 3.0, ELASTOPHENE SP 2.2, ELASTOPHENE SP 3.0, SOPRALENE® 180 SP 3.0, SOPRALENE® 180 SP 3.5 or SOPRALENE® 250 SP

This evaluation report is provided for State of Florida product approval under Rule 61G20-3. The manufacturer shall notify CREEK Technical Services, LLC of any product changes or quality assurance changes throughout the duration for which this report is valid. This evaluation report does not express nor imply warranty, installation, recommended use, or other product attributes that are not specifically addressed herein.

Name	Definition
VR TA Cap	One ply of any one of the following products fully torch adhered over substrate primed with ELASTOCOL 500 or ASTM D 41 Primer: ELASTOPHENE Flam FR GR, ELASTOPHENE Flam LS FR GR, SOPRALENE® Flam 180 FR GR or SOPRALENE® Flam 250 FR GR OPTIONAL – prior to application of cap ply, one ply of ELASTOPHENE Flam, ELASTOPHENE Flam 2.2, ELASTOPHENE SP 2.2, ELASTOPHENE SP 3.0, ELASTOPHENE Flam HS, SOPRALENE® Flam 180, SOPRALENE® Flam 250, SOPRALENE® 250 SP or SOPRALENE® 180 SP 3.5 torch applied, or ELASTOPHENE Sanded, ELASTOPHENE PS, ELASTOPHENE HS, ELASTOPHENE 180 Sanded, ELASTOPHENE 180 PS, SOPRALENE® 180 Sanded, SOPRALENE® 180 Sanded 2.2, SOPRALENE® 180 PS 2.2, or SOPRALENE® 250 Sanded applied in hot asphalt, or COLPLY EF Adhesive. Where COLPLY EF Adhesive is used, priming the substrate is optional

This evaluation report is provided for State of Florida product approval under Rule 61G20-3. The manufacturer shall notify CREEK Technical Services, LLC of any product changes or quality assurance changes throughout the duration for which this report is valid. This evaluation report does not express nor imply warranty, installation, recommended use, or other product attributes that are not specifically addressed herein.

APPROVED ASSEMBLIES

The following notes shall be observed when using the roof system tables below.

1. *MDP*s were calculated using a 2:1 margin of safety per FBC Section 1504.9 and 1523.4. *MDP* must exceed -45 psf for use in the HVHZ.
2. Refer to **LIMITATIONS** and **NOMENCLATURE** sections of this evaluation when using the table(s) below. Items *italicized* refer to specific nomenclature used in this report.
3. Refer to **INSTALLATION** section of this report for installation detail when the information is not explicitly stated for the selected roof system.
4. The on-center (o.c.) spacing given is the maximum allowable attachment spacing for the rated roof system.
5. An optional air/vapor barrier of Derbistick SA may be installed above *Wood Decks* or *Steel Decks* prior to installation of mechanically fastened roof assemblies.
6. Any assembly that includes mechanical fastening of the roof system components into a new structural deck may be used for *Recover* provided all Limitations for *Recover* assemblies are met. The Approved Assembly tables are entitled *Recover* to indicate which systems comply with the aforementioned allowable use.
7. *As Tested* information for roof deck construction is provided for information only. The addition of the *As Tested* deck information does not obviate the requirement for rational design of the roof deck and roof deck attachment in accordance with FBC requirements.

Roof System Numbers and Definitions	
C-A-#	Assemblies with All Layers Adhered over *Concrete Deck* (New or Existing)
C-AM-#	Assemblies with Adhered Membranes over Insulated *Concrete Deck* (New, Existing, or *Recover*)
C-M-#	Mechanically Fastened Assemblies over *Concrete Deck* (New, Existing, or *Recover*)
CW-A-#	Assemblies with All Layers Adhered over *CWF Deck* (New or Existing)
G-A-#	Assemblies with All Layers Adhered over Gypsum Deck (New or Existing)
LC-A-#	Lightweight Concrete Assemblies with All Layers Adhered over *Concrete Deck* (New or Existing)
LS-A-#	Lightweight Concrete Assemblies with All Layers Adhered over *Steel Deck* (New or Existing)
LS-AM-#	Lightweight Concrete Assemblies with Adhered Membranes over *Steel Deck* (New or Existing)
LS-M-#	Mechanically Fastened Lightweight Concrete Assemblies over *Steel Deck* (New or Existing)
R-A-#	*Recover* Assemblies with All Layers Adhered
R-M-#	Mechanically Fastened Recover Assemblies
S-A-#	Assemblies with All Layers Adhered over *Steel Deck* (New or Existing)
S-AM-#	Assemblies with Adhered Membranes over *Steel Deck* (New, Existing or *Recover*)
S-M-#	Mechanically Fastened Assemblies over *Steel Deck* (New, Existing, or *Recover*)
S-W-#	Induction Welded Assemblies over *Steel Deck* (New, Existing, or *Recover*)
W-M-#	Mechanically Fastened Assemblies over *Wood Deck* (New or Existing, or *Recover*)
W-W-#	Induction Welded Assemblies over *Wood Deck* (New, Existing, and *Recover*)

Assemblies with All Layers Adhered over *Concrete Deck* (New or Existing)								
System No.	Vapor Retarder	Base Layer Insulation	Base Insulation Attachment	Top Layer Insulation	Top Insulation Attachment	Membrane	Membrane Attachment	*MDP* (psf)
C-A-1	-	Min. 0.5-inch *ISO r* or *ISO s*	*OB500* ribbon adhered 12-inch o.c.	*ISO HD-A, ISO HD-H, ISO+ s, ISO+ r, DDP, SR*	*OB500* ribbon adhered 12-inch o.c.	*Sentinel* or *Sentinel HFB*	*Sentinel: H2O BA or S BA Sentinel HFB: CR-20*	**-172.5 (Lim. 9; Non-HVHZ)**

This evaluation report is provided for State of Florida product approval under Rule 61G20-3. The manufacturer shall notify CREEK Technical Services, LLC of any product changes or quality assurance changes throughout the duration for which this report is valid. This evaluation report does not express nor imply warranty, installation, recommended use, or other product attributes that are not specifically addressed herein.

Assemblies with All Layers Adhered over *Concrete Deck* (New or Existing)								
System No.	Vapor Retarder	Base Layer Insulation	Base Insulation Attachment	Top Layer Insulation	Top Insulation Attachment	Membrane	Membrane Attachment	*MDP* (psf)
C-A-2	-	Min. 0.5-inch *ISO r* or *ISO s*	*OB500* ribbon adhered 12-inch o.c.	*ISO HD-H*	*OB500* ribbon adhered 12-inch o.c.	*Sentinel HFB*	*D-SPF*	**-172.5 (Lim. 9; Non-HVHZ)**
C-A-3	-	Min. 0.5-inch *ISO r* or *ISO s*	*OB500* ribbon adhered 12-inch o.c.	*DDP, ISO+ s,* or *SR*	*OB500* ribbon adhered 12-inch o.c.	*Sentinel*	*H2O BA or S BA*	**-195 (Lim. 9; Non-HVHZ)**
C-A-4	-	Min. 0.5-inch *ISO r* or *ISO s*	*OB500* ribbon adhered 12-inch o.c.	*DDP, ISO+ s,* or *SR*	*OB500* ribbon adhered 12-inch o.c.	*Sentinel HFB*	*CR-20* or *D-SPF*	**-195 (Lim. 9; Non-HVHZ)**
C-A-5	OPTIONAL *VR EF Cap, VR HA, VR HA Cap, VR SA Cap, VR TA, or VR TA Cap*	OPTIONAL Min. 1.5-inch *ISO s*	*Duotack* ribbons spaced 12-inch o.c.	OPTIONAL *DDP, DXF, DXC, or SR*	*Duotack* ribbons spaced 12-inch o.c.	*Sentinel HFB*	*CR-20*	**-195 (Lim. 9)**
C-A-6	OPTIONAL *VR EF Cap, VR HA, VR HA Cap, VR SA Cap, VR TA, or VR TA Cap*	OPTIONAL Min. 1.5-inch *ISO II*	*Duotack* ribbons spaced 12-inch o.c.	OPTIONAL *DDP, DX, DXF, DXC, or SR*	*Duotack* ribbons spaced 12-inch o.c.	*Sentinel* or *Sentinel HFB*	*Sentinel: H2O BA or S BA Sentinel HFB: H2O BA*	**-195 (Lim. 9)**
C-A-7	OPTIONAL *VR EF Cap, VR HA, VR HA Cap, VR SA Cap, VR TA, or VR TA Cap*	OPTIONAL Min. 1.5-inch *ISO II*	*Duotack* ribbons spaced 12-inch o.c.	OPTIONAL *DDP, DXF, or SR*	*Duotack* ribbons spaced 12-inch o.c.	*Sentinel HFB*	*D-SPF*	**-195 (Lim. 9)**
C-A-8	OPTIONAL *VR EF RA, VR HA, VR EF, VR SV, VR TA, VR CV* or *VR SA*	OPTIONAL Min. 1.5-inch *ISO s*	*Duotack* ribbons spaced 12-inch o.c.	OPTIONAL *ISO HD-A* or *ISO HD-H*	*Duotack* ribbons spaced 12-inch o.c.	*Sentinel HFB*	*CR-20*	**-210 (Lim. 9)**

This evaluation report is provided for State of Florida product approval under Rule 61G20-3. The manufacturer shall notify CREEK Technical Services, LLC of any product changes or quality assurance changes throughout the duration for which this report is valid. This evaluation report does not express nor imply warranty, installation, recommended use, or other product attributes that are not specifically addressed herein.

Assemblies with All Layers Adhered over *Concrete Deck* (New or Existing)								
System No.	Vapor Retarder	Base Layer Insulation	Base Insulation Attachment	Top Layer Insulation	Top Insulation Attachment	Membrane	Membrane Attachment	*MDP* (psf)
C-A-9	OPTIONAL *VR EF RA, VR HA, VR EF, VR SV, VR TA, VR CV* or *VR SA*	OPTIONAL Min. 1.5-inch *ISO II*	*Duotack* ribbons spaced 12-inch o.c.	OPTIONAL *ISO HD-A* or *ISO HD-H*	*Duotack* ribbons spaced 12-inch o.c.	*Sentinel* or *Sentinel HFB*	*Sentinel: H2O BA or S BA Sentinel HFB: H2O BA*	**-210 (Lim. 9)**
C-A-10	OPTIONAL *VR EF RA, VR HA, VR EF, VR SV, VR TA, VR CV* or *VR SA*	OPTIONAL Min. 1.5-inch *ISO II*	*Duotack* ribbons spaced 12-inch o.c.	OPTIONAL *ISO HD-H*	*Duotack* ribbons spaced 12-inch o.c.	*Sentinel HFB*	*D-SPF*	**-210 (Lim. 9)**
C-A-11	OPTIONAL *VR CV, VR SV, VR EF RA II, VR EF RA I, VR BUR, VR HA, VR EF, VR TA* or *VR SA*	OPTIONAL Min. 1.5-inch *ISO s*	*Duotack* ribbons spaced 12-inch o.c.	OPTIONAL *DDP, DXF, DXC, or SR*	*Duotack* ribbons spaced 12-inch o.c.	*Sentinel HFB*	*CR-20*	**-225 (Lim. 9)**
C-A-12	OPTIONAL *VR CV*	OPTIONAL Min. 1.5-inch *ISO II*	*Duotack* ribbons spaced 12-inch o.c.	OPTIONAL *DDP, DX, DXF, DXC, or SR*	*Duotack* ribbons spaced 12-inch o.c.	*Sentinel* or *Sentinel HFB*	*Sentinel: H2O BA or S BA Sentinel HFB: H2O BA*	**-232.5 (Lim. 9)**
C-A-13	OPTIONAL *VR CV*	OPTIONAL Min. 1.5-inch *ISO s* or *ISO+ x*	*Duotack* ribbons spaced 12-inch o.c.	OPTIONAL *DDP, DXF, or SR*	*Duotack* ribbons spaced 12-inch o.c.	*Sentinel HFB*	*D-SPF*	**-232.5 (Lim. 9)**
C-A-14	OPTIONAL *VR SV*	OPTIONAL Min. 1.5-inch *ISO II*	*Duotack* ribbons spaced 12-inch o.c.	OPTIONAL *DDP, DX, DXF, DXC, or SR*	*Duotack* ribbons spaced 12-inch o.c.	*Sentinel* or *Sentinel HFB*	*Sentinel: H2O BA or S BA Sentinel HFB: H2O BA*	**-240 (Lim. 9)**
C-A-15	OPTIONAL *VR SV*	OPTIONAL Min. 1.5-inch *ISO s* or *ISO+ x*	*Duotack* ribbons spaced 12-inch o.c.	OPTIONAL *DDP, DXF, or SR*	*Duotack* ribbons spaced 12-inch o.c.	*Sentinel HFB*	*D-SPF*	**-240 (Lim. 9)**
C-A-16	OPTIONAL *VR EF RA II*	OPTIONAL Min. 1.5-inch *ISO II*	*Duotack* ribbons spaced 12-inch o.c.	OPTIONAL *DDP, DX, DXF, DXC, or SR*	*Duotack* ribbons spaced 12-inch o.c.	*Sentinel* or *Sentinel HFB*	*Sentinel: H2O BA or S BA Sentinel HFB: H2O BA*	**-255 (Lim. 9)**
C-A-17	OPTIONAL *VR EF RA II*	OPTIONAL Min. 1.5-inch *ISO s* or *ISO+ x*	*Duotack* ribbons spaced 12-inch o.c.	OPTIONAL *DDP, DXF, or SR*	*Duotack* ribbons spaced 12-inch o.c.	*Sentinel HFB*	*D-SPF*	**-255 (Lim. 9)**

This evaluation report is provided for State of Florida product approval under Rule 61G20-3. The manufacturer shall notify CREEK Technical Services, LLC of any product changes or quality assurance changes throughout the duration for which this report is valid. This evaluation report does not express nor imply warranty, installation, recommended use, or other product attributes that are not specifically addressed herein.

Assemblies with All Layers Adhered over *Concrete Deck* (New or Existing)								
System No.	Vapor Retarder	Base Layer Insulation	Base Insulation Attachment	Top Layer Insulation	Top Insulation Attachment	Membrane	Membrane Attachment	*MDP* (psf)
C-A-18	OPTIONAL *VR EF RA I*	OPTIONAL Min. 1.5-inch *ISO II*	*Duotack* ribbons spaced 12-inch o.c.	OPTIONAL *DDP, DX, DXF, DXC, or SR*	*Duotack* ribbons spaced 12-inch o.c.	*Sentinel* or *Sentinel HFB*	*Sentinel: H2O BA or S BA Sentinel HFB: H2O BA*	**-262.5 (Lim. 9)**
C-A-19	OPTIONAL *VR EF RA I*	OPTIONAL Min. 1.5-inch *ISO s* or *ISO+ x*	*Duotack* ribbons spaced 12-inch o.c.	OPTIONAL *DDP, DXF, or SR*	*Duotack* ribbons spaced 12-inch o.c.	*Sentinel HFB*	*D-SPF*	**-262.5 (Lim. 9)**
C-A-20	OPTIONAL *VR BUR, VR HA* or *VR EF*	OPTIONAL Min. 1.5-inch *ISO II*	*Duotack* ribbons spaced 12-inch o.c.	OPTIONAL *DDP, DX, DXF, DXC, or SR*	*Duotack* ribbons spaced 12-inch o.c.	*Sentinel* or *Sentinel HFB*	*Sentinel: H2O BA or S BA Sentinel HFB: H2O BA*	**-270 (Lim. 9)**
C-A-21	OPTIONAL *VR BUR, VR HA* or *VR EF*	OPTIONAL Min. 1.5-inch *ISO s* or *ISO+ x*	*Duotack* ribbons spaced 12-inch o.c.	OPTIONAL *DDP, DXF, or SR*	*Duotack* ribbons spaced 12-inch o.c.	*Sentinel HFB*	*D-SPF*	**-270 (Lim. 9)**
C-A-22	OPTIONAL *VR TA* or *VR SA*	OPTIONAL Min. 1.5-inch *ISO II*	*Duotack* ribbons spaced 12-inch o.c.	OPTIONAL *DDP, DX, DXF, DXC, or SR*	*Duotack* ribbons spaced 12-inch o.c.	*Sentinel* or *Sentinel HFB*	*Sentinel: H2O BA or S BA Sentinel HFB: H2O BA*	**-315 (Lim. 9)**
C-A-23	OPTIONAL *VR TA* or *VR SA*	OPTIONAL Min. 1.5-inch *ISO s* or *ISO+ x*	*Duotack* ribbons spaced 12-inch o.c.	OPTIONAL *DDP, DXF, or SR*	*Duotack* ribbons spaced 12-inch o.c.	*Sentinel HFB*	*D-SPF*	**-315 (Lim. 9)**
C-A-24	-	*OPTIONAL Min. 1.5-inch ISO s*	*OB500 or HVIA-III ribbon adhered 12-inch o.c.*	*DXF*	*OB500 or HVIA-III ribbon adhered 12-inch o.c.*	Sentinel P150 or P200	*H2O BA*	**-382.5 (Lim. 9)**
C-A-25	-	*OPTIONAL Min. 1.5-inch ISO s*	*OB500 or HVIA-III ribbon adhered 12-inch o.c.*	*DXF*	*OB500 or HVIA-III ribbon adhered 12-inch o.c.*	*Sentinel HFB*	*D-SPF*	**-382.5 (Lim. 9)**
C-A-26	-	OPTIONAL Min. 1.5-inch *ISO s*	*OB500, DOW-IS* or *HVIA-III* ribbon adhered 12-inch o.c.	*DXC*	*OB500, DOW-IS* or *HVIA-III* ribbon adhered 12-inch o.c.	Sentinel P150 or P200	*H2O BA*	**-382.5 (Lim. 9)**
C-A-27	-	-	-	-	-	*Sentinel HFB*	*CR-20*	**-457.5 (Lim. 9)**
C-A-28	-	OPTIONAL Min. 1.5-inch *ISO s*	ASTM D 312, Type IV hot asphalt	*DXF*	ASTM D 312, Type IV hot asphalt	Sentinel P150 or P200	*H2O BA*	**-495 (Lim. 9)**

This evaluation report is provided for State of Florida product approval under Rule 61G20-3. The manufacturer shall notify CREEK Technical Services, LLC of any product changes or quality assurance changes throughout the duration for which this report is valid. This evaluation report does not express nor imply warranty, installation, recommended use, or other product attributes that are not specifically addressed herein.

Assemblies with All Layers Adhered over *Concrete Deck* (New or Existing)								
System No.	Vapor Retarder	Base Layer Insulation	Base Insulation Attachment	Top Layer Insulation	Top Insulation Attachment	Membrane	Membrane Attachment	*MDP* (psf)
C-A-29	-	OPTIONAL Min. 1.5-inch *ISO s*	ASTM D 312, Type IV hot asphalt	*DXF*	ASTM D 312, Type IV hot asphalt	*Sentinel HFB*	*D-SPF*	**-495 (Lim. 9)**

Assemblies with Adhered Membranes over Insulated *Concrete Deck* (New, Existing or *Recover*)									
System No.	Vapor Barrier	Base Insulation	Base Insulation Attachment	Top Insulation	Top Insulation Attachment	Coverboard	Membrane	Membrane Attachment	*MDP* (psf)
C-AM-1	See base insulation	*VR TA, VR SA, VR HA, VR EF, or VR SV* applied over Min 0.5-inch *DDP* or *SR*	*S Plates & Fasteners* secured at a rate of 1 per 4-ft^2	Min. 1.5-inch *ISO s* or *ISO r*	*Duotack* applied 12-inch o.c	OPTIONAL *DDP, DXC, DXF or SR* secured with *Duotack* applied 12-inch o.c. (Coverboard REQUIRED over *ISO x or ISO r)*	*Sentinel HFB*	*CR-20*	**-45 (Lim. 7; Non-HVHZ)**
C-AM-2	See base insulation	*VR TA, VR SA, VR HA, VR EF, or VR SV* applied over Min 0.5-inch *DDP* or *SR*	*S Plates & Fasteners* secured at a rate of 1 per 4-ft^2	Min. 1.5-inch *ISO-II*	*Duotack* applied 12-inch o.c	OPTIONAL *DDP, DXC, DXF or SR* secured with *Duotack* applied 12-inch o.c. (Coverboard REQUIRED over *ISO x or ISO r)*	*Sentinel* or *Sentinel HFB*	*Sentinel: H2O BA or S BA Sentinel HFB: H2O BA*	**-45 (Lim. 7; Non-HVHZ)**
C-AM-3	See base insulation	*VR TA, VR SA, VR HA, VR EF, or VR SV* applied over Min 0.5-inch *DDP* or *SR*	*S Plates & Fasteners* secured at a rate of 1 fastener per 4.00ft^2	Min. 1.5-inch *ISO s* or *ISO+ x*	*Duotack* applied 12-inch o.c	OPTIONAL *DDP, DXF or SR* secured with *Duotack* applied 12-inch o.c.	*Sentinel HFB*	*D-SPF*	**-45 (Lim. 7; Non-HVHZ)**
C-AM-4	See base insulation	OPTIONAL *DD* or *DDP*	Simultaneously secured with top layer	Min. 2-inch *ISO s* or *ISO r*	*S Plates & Fasteners* secured at a rate of 1 fastener per 4.00ft^2	OPTIONAL *DDP, DXC, DXF* or *SR* secured with *Duotack* applied 12-inch o.c.	*Sentinel HFB*	*CR-20*	**-45 (Lim. 7; Non-HVHZ)**

This evaluation report is provided for State of Florida product approval under Rule 61G20-3. The manufacturer shall notify CREEK Technical Services, LLC of any product changes or quality assurance changes throughout the duration for which this report is valid. This evaluation report does not express nor imply warranty, installation, recommended use, or other product attributes that are not specifically addressed herein.

Assemblies with Adhered Membranes over Insulated *Concrete Deck* (New, Existing or *Recover*)									
System No.	Vapor Barrier	Base Insulation	Base Insulation Attachment	Top Insulation	Top Insulation Attachment	Coverboard	Membrane	Membrane Attachment	*MDP* (psf)
C-AM-5	See base insulation	OPTIONAL *DD* or *DDP*	Simultaneously secured with top layer	Min. 2-inch *ISO s*, *ISO r* or *ISO+ x*	*S Plates & Fasteners* secured at a rate of 1 fastener per 4.00ft^2	OPTIONAL *DDP, DXC, DXF* or *SR* secured with *Duotack* applied 12-inch o.c.	*Sentinel* or *Sentinel HFB*	*Sentinel: H2O BA or S BA Sentinel HFB: H2O BA*	**-45 (Lim. 7; Non-HVHZ)**
C-AM-6	See base insulation	OPTIONAL *DD* or *DDP*	Simultaneously secured with top layer	Min. 2-inch *ISO s*, or *ISO+ x*	*S Plates & Fasteners* secured at a rate of 1 fastener per 4.00ft^2	OPTIONAL *DDP, DXF* or *SR* secured with *Duotack* applied 12-inch o.c.	*Sentinel HFB*	*D-SPF*	**-45 (Lim. 7; Non-HVHZ)**
C-AM-7	See base insulation	OPTIONAL *DD* or *DDP*	Simultaneously secured with top layer	Min. 2-inch *ISO s or ISO r*	*S Plates & Fasteners* secured at a rate of 1 fastener per 4.00ft^2	OPTIONAL *DDP, DXC, DXF, or SR* secured with *D-SPF* applied 12-inch o.c. (Coverboard REQUIRED over *ISO r)*	*Sentinel* or *Sentinel HFB*	*Sentinel: H2O BA or S BA Sentinel HFB: H2O BA or CR-20*	**-45 (Lim. 7; Non-HVHZ)**
C-AM-8	See base insulation	OPTIONAL *DD* or *DDP*	Simultaneously secured with top layer	Min. 2-inch *ISO s*	*S Plates & Fasteners* secured at a rate of 1 fastener per 4.00ft^2	OPTIONAL *DDP, DXF, or SR* secured with *D-SPF* applied 12-inch o.c.	*Sentinel HFB*	*D-SPF*	**-45 (Lim. 7; Non-HVHZ)**
C-AM-9	See base insulation	OPTIONAL *DD* or *DDP*	Simultaneously secured with top layer	Min. 2-inch *ISO s or ISO r*	*S Plates & Fasteners* secured at a rate of 1 fastener per 4.00ft^2	*DDP, DXF, or SR* secured with *D-SPF* applied 12-inch o.c.	*Sentinel HFB*	*D-SPF*	**-45 (Lim. 7; Non-HVHZ)**
C-AM-10	OPTIONAL *DD, DDP, DX, DXF* or *DXC*	Simultaneously secured with top layer	-	Min. 1.5-inch *Approved Insulation*	Simultaneously secured with top layer	*DDP* secured with *S Plates & Fasteners* at a rate of 1 fastener per 1.78ft^2	*Sentinel* or *Sentinel HFB*	*Sentinel: H2O BA or S BA Sentinel HFB: CR-20* or *D-SPF*	**-52.5 (Lim. 7)**

This evaluation report is provided for State of Florida product approval under Rule 61G20-3. The manufacturer shall notify CREEK Technical Services, LLC of any product changes or quality assurance changes throughout the duration for which this report is valid. This evaluation report does not express nor imply warranty, installation, recommended use, or other product attributes that are not specifically addressed herein.

Assemblies with Adhered Membranes over Insulated *Concrete Deck* (New, Existing or *Recover*)									
System No.	Vapor Barrier	Base Insulation	Base Insulation Attachment	Top Insulation	Top Insulation Attachment	Coverboard	Membrane	Membrane Attachment	*MDP* (psf)
C-AM-11	OPTIONAL *DD*, *DDP, DX, DXF* or *DXC*	Simultaneously secured with top layer	-	Min. 1.5-inch *Approved Insulation*	Simultaneously secured with top layer	Min 0.5-inch *DDP* secured with *S Plates & Fasteners* at a rate of 1 fastener per 1.78ft^2	*Sentinel* or *Sentinel HFB*	*Sentinel: H2O BA or S BA Sentinel HFB: CR-20* or *D-SPF*	**-67.5 (Lim. 7)**
C-AM-12	OPTIONAL *DD*, *DDP, DX, DXF* or *DXC*	Simultaneously secured with top layer	-	Min. 1.5-inch *Approved Insulation*	Simultaneously secured with top layer	Min 0.5-inch *DDP* secured with *S Plates & Fasteners* at a rate of 1 fastener per 1.6ft^2	*Sentinel* or *Sentinel HFB*	*Sentinel: H2O BA or S BA Sentinel HFB: CR-20* or *D-SPF*	**-75 (Lim. 7)**
C-AM-13	-	Min. 0.5-inch *DDP* or *SR* fastened to deck followed by *VR SA, VR HA,* or *VR EF*	*S Plates & Fasteners* secured at a rate of 1 fastener per 2.00ft^2	Min 1.5-inch *ISO r* or *ISO s*	*Duotack* ribbon adhered 12-inch o.c.	OPTIONAL *DDP or SR* fully adhered in *Duotack* ribbons spaced 12-inch o.c.	*Sentinel*	*H2O BA or S BA*	**-82.5 (Lim. 7)**
C-AM-14	OPTIONAL *VR TA, VR SV, VR SA, VR HA, VR EF, or VR CV*	OPTIONAL *Approved Insulation*	Simultaneously secured with top layer	Min 2.0-inch *ISO r* or *ISO s*	*S Plates & Fasteners* secured at a rate of 1 fastener per 1.6ft^2	OPTIONAL *DD, DDP or SR* fully adhered in *Duotack* ribbons spaced 12-inch o.c.	*Sentinel*	*H2O BA or S BA*	**-82.5 (Lim. 7)**
C-AM-15	OPTIONAL *DD*, *DDP, DX, DXF* or *DXC*	Simultaneously secured with top layer	-	Min. 1.5-inch *Approved Insulation*	Simultaneously secured with top layer	Min 0.5-inch *DDP* secured with *S Plates & Fasteners* secured at a rate of 1 fastener per 1.00ft^2	*Sentinel* or *Sentinel HFB*	*Sentinel: H2O BA or S BA Sentinel HFB: CR-20* or *D-SPF*	**-82.5 (Lim. 7)**

This evaluation report is provided for State of Florida product approval under Rule 61G20-3. The manufacturer shall notify CREEK Technical Services, LLC of any product changes or quality assurance changes throughout the duration for which this report is valid. This evaluation report does not express nor imply warranty, installation, recommended use, or other product attributes that are not specifically addressed herein.

Assemblies with Adhered Membranes over Insulated *Concrete Deck* (New, Existing or *Recover*)									
System No.	Vapor Barrier	Base Insulation	Base Insulation Attachment	Top Insulation	Top Insulation Attachment	Coverboard	Membrane	Membrane Attachment	*MDP* (psf)
C-AM-16	See base insulation	*VR TA, VR SA, VR HA, VR EF, or VR SV* applied over Min 0.5-inch *DDP* or *SR*	*S Plates & Fasteners* secured at a rate of 1 fastener per 2ft^2	Min. 1.5-inch *ISO-II*	*Duotack* applied 12-inch o.c	OPTIONAL *DDP, DXC, DXF* or *SR* secured with *Duotack* applied 12-inch o.c. (Coverboard REQUIRED over *ISO x or ISO r)*	*Sentinel* or *Sentinel HFB*	*Sentinel: H2O BA or S BA Sentinel HFB: H2O BA or CR-20*	**-82.5 (Lim. 7)**
C-AM-17	See base insulation	*VR TA, VR SA, VR HA, VR EF, or VR SV* applied over Min 0.5-inch *DDP* or *SR*	*S Plates & Fasteners* secured at a rate of 1 fastener per 2ft^2	Min. 1.5-inch *ISO s*, or *ISO+ x*	*Duotack* applied 12-inch o.c	OPTIONAL *DDP, DXF* or *SR* secured with *Duotack* applied 12-inch o.c.	*Sentinel HFB*	*D-SPF*	**-82.5 (Lim. 7)**
C-AM-18	See base insulation	*DD* or *DDP*	-	Min. 2-inch *ISO s* or *ISO r*	*S Plates & Fasteners* secured at a rate of 1 fastener per 1.6ft^2	OPTIONAL *DDP, DXC, DXF* or *SR* secured with *Duotack* applied 12-inch o.c. (Coverboard REQUIRED over *ISO x or ISO r)*	*Sentinel HFB*	*CR-20*	**-82.5 (Lim. 7)**
C-AM-19	See base insulation	*DD* or *DDP*	-	Min. 2-inch *ISO s*, *ISO r* or *ISO + x*	*S Plates & Fasteners* secured at a rate of 1 fastener per 1.6ft^2	OPTIONAL *DDP, DXC, DXF* or *SR* secured with *Duotack* applied 12-inch o.c. (Coverboard REQUIRED over *ISO x or ISO r)*	*Sentinel* or *Sentinel HFB*	*Sentinel: H2O BA or S BA Sentinel HFB: H2O BA*	**-82.5 (Lim. 7)**
C-AM-20	See base insulation	*DD* or *DDP*	-	Min. 2-inch *ISO s* or *ISO + x*	*S Plates & Fasteners* secured at a rate of 1 fastener per 1.6ft^2	OPTIONAL *DDP, DXF* or *SR* secured with *Duotack* applied 12-inch o.c.	*Sentinel HFB*	*D-SPF*	**-82.5 (Lim. 7)**

This evaluation report is provided for State of Florida product approval under Rule 61G20-3. The manufacturer shall notify CREEK Technical Services, LLC of any product changes or quality assurance changes throughout the duration for which this report is valid. This evaluation report does not express nor imply warranty, installation, recommended use, or other product attributes that are not specifically addressed herein.

Assemblies with Adhered Membranes over Insulated *Concrete Deck* (New, Existing or *Recover*)									
System No.	Vapor Barrier	Base Insulation	Base Insulation Attachment	Top Insulation	Top Insulation Attachment	Coverboard	Membrane	Membrane Attachment	*MDP* (psf)
C-AM-21	See base insulation	*DD* or *DDP*	-	Min. 2-inch *ISO s or ISO r*	*S Plates & Fasteners* secured at a rate of 1 fastener per 1.6ft^2	OPTIONAL *DDP, DXC, DXF, or SR* secured with *D-SPF* applied 12-inch o.c. (Coverboard REQUIRED over *ISO r)*	*Sentinel* or *Sentinel HFB*	*Sentinel: H2O BA or S BA Sentinel HFB: H2O BA or CR-20*	**-82.5 (Lim. 7)**
C-AM-22	See base insulation	*DD* or *DDP*	-	Min. 2-inch *ISO s or ISO r*	*S Plates & Fasteners* secured at a rate of 1 fastener per 1.6ft^2	*DDP, DXF, or SR* secured with *D-SPF* applied 12-inch o.c.	*Sentinel HFB*	*D-SPF*	**-82.5 (Lim. 7)**
C-AM-23	OPTIONAL *DD* or *DDP*	Simultaneously secured with top layer	-	Min. 1.5-inch *Approved Insulation*	Simultaneously secured with top layer	Min 0.5-inch *DDP* secured with *S Plates & Fasteners* at a rate of 1 fastener per 1.00ft^2	*Sentinel*	*H2O BA or S BA*	**-127.5 (Lim. 7)**
C-AM-24	OPTIONAL *DD* or *DDP*	Simultaneously secured with top layer	-	Min. 1.5-inch *Approved Insulation*	Simultaneously secured with top layer	Min 0.5-inch *DDP* secured with *S Plates & Fasteners* at a rate of 1 fastener per 1.00ft^2	*Sentinel HFB*	*D-SPF*	**-127.5 (Lim. 7)**

Mechanically Fastened Assemblies over *Concrete Deck* (New, Existing, or *Recover*)						
System No.	Vapor Retarder	Insulation	Insulation Attachment	Membrane	Attachment	*MDP* (psf)
C-M-1	OPTIONAL *VR TA, VR SA, VR SV, VR HA, VR EF or VR CV*	Min. 1.5-inch *Approved Insulation*	Preliminarily secured	*Sentinel* (120-inch wide)	*#14 MP Fastener* and 2.4" Seam Plates fastened 12-inch o.c. within laps spaced 114-inch o.c.	**-52.5 (Lim. 7)**
C-M-2	OPTIONAL *VR TA, VR SA, VR SV, VR HA, VR EF or VR CV*	Min. 0.5-inch *Approved Insulation*	Preliminarily secured	*Sentinel*	*#14 MP Fastener* and 2.4" Seam Plates fastened 6-inch o.c. within 6-inch wide laps spaced 54-inch o.c.; fastener centered 1.25-inches from edge of tab	**-67.5 (Lim. 7)**

This evaluation report is provided for State of Florida product approval under Rule 61G20-3. The manufacturer shall notify CREEK Technical Services, LLC of any product changes or quality assurance changes throughout the duration for which this report is valid. This evaluation report does not express nor imply warranty, installation, recommended use, or other product attributes that are not specifically addressed herein.

Mechanically Fastened Assemblies over *Concrete Deck* (New, Existing, or *Recover*)						
System No.	Vapor Retarder	Insulation	Insulation Attachment	Membrane	Attachment	*MDP* (psf)
C-M-3	OPTIONAL *VR TA, VR SA, VR SV, VR HA, VR EF or VR CV*	Min. 1.5-inch *Approved Insulation*	Preliminarily secured	*Sentinel* (120-inch wide)	*#14 MP Fastener* and 2.4" Seam Plates fastened 6-inch o.c. within 6-inch wide laps spaced 114-inch o.c.	**-67.5 (Lim. 7)**

Induction Welded Assemblies over *Concrete Deck* (New, Existing, or *Recover*)							
System No.	Base Layer Insulation	Base Insulation Attachment	Top Layer Insulation	Top Insulation Attachment	Membrane	Membrane Attachment	*MDP* (psf)
C-W-1	OPTIONAL *Approved Insulation*	Secured with Top Layer	OPTIONAL Min. 1.5-inch *Approved insulation*	*#14 isoweld* or *#15 isoweld* secured at a rate of *1 per 6.00-ft*^{2} (See Appendix A- Induction Weld Patterns)	*Sentinel*	Induction welded to each insulation plate	**-37.5 (Lim. 7; Non-HVHZ)**
C-W-2	OPTIONAL *Approved Insulation*	Secured with Top Layer	Min. 1.5-inch *Approved Insulation*	*SENTINEL PVC IW* secured at a rate of 1 fastener per 5.33ft^2	*Sentinel*	Induction welded to each insulation plate	**-45 (Lim. 7; Non-HVHZ)**
C-W-3	OPTIONAL *Approved Insulation*	Secured with Top Layer	Min. 1.5-inch *Approved Insulation*	*SENTINEL PVC IW* secured 12-inch o.c. in rows spaced 5-ft o.c.	*Sentinel*	Induction welded to each insulation plate	**-45 (Lim. 7)**
C-W-4	OPTIONAL *Approved Insulation*	Secured with Top Layer	OPTIONAL Min. 1.5-inch *Approved insulation*	*#14 isoweld* or *#15 isoweld* secured 12-inch o.c. in rows spaced 60-inch o.c.	*Sentinel*	Induction welded to each insulation plate	**-45 (Lim. 7)**
C-W-5	OPTIONAL *Approved Insulation*	Secured with Top Layer	OPTIONAL Min. 1.5-inch *Approved insulation*	*#14 isoweld* or *#15 isoweld* secured at a rate of *1 per 4.00-ft*^{2} (See Appendix A- Induction Weld Patterns)	*Sentinel*	Induction welded to each insulation plate	**-52.5 (Lim. 7)**
C-W-6	OPTIONAL *Approved Insulation*	Secured with Top Layer	Min. 1.5-inch *Approved Insulation*	*SENTINEL PVC IW* secured at a rate of 1 fastener per 4.00ft^2	*Sentinel*	Induction welded to each insulation plate	**-52.5 (Lim. 7)**
C-W-7	OPTIONAL *Approved Insulation*	Secured with Top Layer	Min. 1.5-inch *Approved Insulation*	*SENTINEL PVC IW* secured 12-inch o.c. in rows spaced 4-ft o.c.	*Sentinel*	Induction welded to each insulation plate	**-52.5 (Lim. 7)**
C-W-8	OPTIONAL *Approved Insulation*	Secured with Top Layer	Min. 1.5-inch *Approved Insulation*	*SENTINEL PVC IW* secured at a rate of 1 fastener per 3.2ft^2	*Sentinel*	Induction welded to each insulation plate	**-60 (Lim. 7)**

This evaluation report is provided for State of Florida product approval under Rule 61G20-3. The manufacturer shall notify CREEK Technical Services, LLC of any product changes or quality assurance changes throughout the duration for which this report is valid. This evaluation report does not express nor imply warranty, installation, recommended use, or other product attributes that are not specifically addressed herein.

Induction Welded Assemblies over *Concrete Deck* (New, Existing, or *Recover*)							
System No.	Base Layer Insulation	Base Insulation Attachment	Top Layer Insulation	Top Insulation Attachment	Membrane	Membrane Attachment	*MDP* (psf)
C-W-9	OPTIONAL *Approved Insulation*	Secured with Top Layer	Min. 1.5-inch *Approved Insulation*	*SENTINEL PVC IW* secured 12-inch o.c. in rows spaced 3-ft o.c.	*Sentinel*	Induction welded to each insulation plate	**-60 (Lim. 7)**
C-W-10	OPTIONAL *Approved Insulation*	Secured with Top Layer	Min. 1.5-inch *Approved Insulation*	*SENTINEL PVC IW* secured at a rate of 1 fastener per 2.67ft^2	*Sentinel*	Induction welded to each insulation plate	**-67.5 (Lim. 7)**
C-W-11	OPTIONAL *Approved Insulation*	Secured with Top Layer	Min. 1.5-inch *Approved Insulation*	*SENTINEL PVC IW* secured 6-inch o.c. in rows spaced 5-ft o.c.	*Sentinel*	Induction welded to each insulation plate	**-75 (Lim. 7)**
C-W-12	OPTIONAL *Approved Insulation*	Secured with Top Layer	OPTIONAL Min. 1.5-inch *Approved insulation*	*#14 isoweld* or *#15 isoweld* secured at a rate of *1 per 3.00-ft^2* (See Appendix A- Induction Weld Patterns)	*Sentinel*	Induction welded to each insulation plate	**-82.5 (Lim. 7)**
C-W-13	OPTIONAL *Approved Insulation*	Secured with Top Layer	OPTIONAL Min. 1.5-inch *Approved insulation*	*#14 isoweld* or *#15 isoweld* secured 6-inch o.c. in rows spaced 60-inch o.c.	*Sentinel*	Induction welded to each insulation plate	**-90 (Lim. 7)**
C-W-14	OPTIONAL *Approved Insulation*	Secured with Top Layer	Min. 1.5-inch *Approved Insulation*	*SENTINEL PVC IW* secured at a rate of 1 fastener per 2.00ft^2	*Sentinel*	Induction welded to each insulation plate	**-90 (Lim. 7)**
C-W-15	OPTIONAL *Approved Insulation*	Secured with Top Layer	Min. 1.5-inch *Approved Insulation*	*SENTINEL PVC IW* secured 6-inch o.c. in rows spaced 4-ft o.c.	*Sentinel*	Induction welded to each insulation plate	**-90 (Lim. 7)**
C-W-16	OPTIONAL *Approved Insulation*	Secured with Top Layer	Min. 1.5-inch *Approved Insulation*	*SENTINEL PVC IW* secured at a rate of 1 fastener per 1.78ft^2	*Sentinel*	Induction welded to each insulation plate	**-105 (Lim. 7)**
C-W-17	OPTIONAL *Approved Insulation*	Secured with Top Layer	Min. 1.5-inch *Approved Insulation*	*SENTINEL PVC IW* secured 6-inch o.c. in rows spaced 3-ft o.c.	*Sentinel*	Induction welded to each insulation plate	**-112.5 (Lim. 7)**
C-W-18	OPTIONAL *Approved Insulation*	Secured with Top Layer	Min. 1.5-inch *Approved Insulation*	*SENTINEL PVC IW* secured at a rate of 1 fastener per 1.33ft^2	*Sentinel*	Induction welded to each insulation plate	**-135 (Lim. 7)**
C-W-19	OPTIONAL *Approved Insulation*	Secured with Top Layer	Min. 1.5-inch *Approved Insulation*	*SENTINEL PVC IW* secured at a rate of 1 fastener per 1.00ft^2	*Sentinel*	Induction welded to each insulation plate	**-142.5 (Lim. 7)**

This evaluation report is provided for State of Florida product approval under Rule 61G20-3. The manufacturer shall notify CREEK Technical Services, LLC of any product changes or quality assurance changes throughout the duration for which this report is valid. This evaluation report does not express nor imply warranty, installation, recommended use, or other product attributes that are not specifically addressed herein.

Assemblies with All Layers Adhered over *CWF Deck* (New or Existing)								
System No.	Vapor Barrier	Base Layer Insulation	Base Insulation Attachment	Top Layer Insulation	Top Insulation Attachment	Membrane	Attachment	*MDP* (psf)
CW-A-1	*DXF* adhered with *Duotack* in ribbons spaced 12-inch o.c. under *VR HA, VR SV, VR SA* or one ply of *VR TA*	Min. 1.5-inch *ISO s*	*Duotack* in ribbons spaced 12-inch o.c.	OPTIONAL *DDP, DXC, DXF, ISO HD-H or SR*	*Duotack* in ribbons spaced 12-inch o.c.	*Sentinel HFB*	*CR-20*	**-162.5 (Lim. 9)**
CW-A-2	*DXF* adhered with *Duotack* in ribbons spaced 12-inch o.c. under *VR HA, VR SV, VR SA* or one ply of *VR TA*	Min. 1.5-inch *ISO-II*	*Duotack* in ribbons spaced 12-inch o.c.	OPTIONAL *DDP, DXC, DXF, ISO HD-H or SR*	*Duotack* in ribbons spaced 12-inch o.c.	*Sentinel*	*H2O BA*	**-162.5 (Lim. 9)**
CW-A-3	*DXF* adhered with *Duotack* in ribbons spaced 12-inch o.c. under *VR HA, VR SV, VR SA* or one ply of *VR TA*	Min. 1.5-inch *ISO s*, or *ISO+ x*	*Duotack* in ribbons spaced 12-inch o.c.	OPTIONAL *DDP, DXF, ISO HD-H or SR*	*Duotack* in ribbons spaced 12-inch o.c.	*Sentinel HFB*	*D-SPF*	**-162.5 (Lim. 9)**
CW-A-4	-	Min. 1.5-inch *ISO-II*	*Duotack* in ribbons spaced 12-inch o.c.	*ISO HD-H*	*Duotack* in ribbons spaced 12-inch o.c.	*Sentinel* or *Sentinel HFB*	*Sentinel: H2O BA Sentinel HFB: CR-20*	**-165 (Lim. 9)**
CW-A-5	-	Min. 1.5-inch *ISO-II*	*Duotack* in ribbons spaced 12-inch o.c.	*ISO HD-H*	*Duotack* in ribbons spaced 12-inch o.c.	*Sentinel HFB*	*D-SPF*	**-165 (Lim. 9)**
CW-A-6	*DXF* adhered with *Duotack* in ribbons spaced 6-inch o.c. under *VR HA, VR SV, VR SA* or one ply of *VR TA*	Min. 1.5-inch *ISO s*	*Duotack* in ribbons spaced 6-inch o.c.	OPTIONAL *DDP, DXC, DXF or SR*	*Duotack* in ribbons spaced 6-inch o.c.	*Sentinel HFB*	*CR-20*	**-185 (Lim. 9)**
CW-A-7	*DXF* adhered with *Duotack* in ribbons spaced 6-inch o.c. under *VR HA, VR SV, VR SA* or one ply of *VR TA*	Min. 1.5-inch *ISO-II*	*Duotack* in ribbons spaced 6-inch o.c.	OPTIONAL *DDP, DXC, DXF or SR*	*Duotack* in ribbons spaced 6-inch o.c.	*Sentinel*	*H2O BA*	**-185 (Lim. 9)**
CW-A-8	*DXF* adhered with *Duotack* in ribbons spaced 6-inch o.c. under *VR HA, VR SV, VR SA* or one ply of *VR TA*	Min. 1.5-inch *ISO s*, or *ISO+ x*	*Duotack* in ribbons spaced 6-inch o.c.	OPTIONAL *DDP, DXF or SR*	*Duotack* in ribbons spaced 6-inch o.c.	*Sentinel HFB*	*D-SPF*	**-185 (Lim. 9)**
CW-A-9	-	Min. 1.5-inch *ISO s*	*Duotack* in ribbons spaced 12-inch o.c.	OPTIONAL *DDP, DXC, DXF, or SR*	*Duotack* in ribbons spaced 12-inch o.c.	*Sentinel HFB*	*CR-20*	**-190 (Lim. 9)**

This evaluation report is provided for State of Florida product approval under Rule 61G20-3. The manufacturer shall notify CREEK Technical Services, LLC of any product changes or quality assurance changes throughout the duration for which this report is valid. This evaluation report does not express nor imply warranty, installation, recommended use, or other product attributes that are not specifically addressed herein.

Assemblies with All Layers Adhered over *CWF Deck* (New or Existing)								
System No.	Vapor Barrier	Base Layer Insulation	Base Insulation Attachment	Top Layer Insulation	Top Insulation Attachment	Membrane	Attachment	*MDP* (psf)
CW-A-10	-	Min. 1.5-inch *ISO-II*	*Duotack* in ribbons spaced 12-inch o.c.	OPTIONAL *DDP, DXC, DXF, or SR*	*Duotack* in ribbons spaced 12-inch o.c.	*Sentinel*	*Sentinel: H2O BA*	**-190 (Lim. 9)**
CW-A-11	-	Min. 1.5-inch *ISO s*, or *ISO+ x*	*Duotack* in ribbons spaced 12-inch o.c.	OPTIONAL *DDP, DXF, or SR*	*Duotack* in ribbons spaced 12-inch o.c.	*Sentinel HFB*	*D-SPF*	**-185 (Lim. 9)**
CW-A-12	-	Min. 1.5-inch *ISO-II*	*Duotack* in ribbons spaced 6-inch o.c.	*DDP, DXC, or SR*	*Duotack* in ribbons spaced 6-inch o.c.	*Sentinel HFB*	*CR-20*	**-285 (Lim. 9)**
CW-A-13	-	Min. 1.5-inch *ISO-II*	*Duotack* in ribbons spaced 6-inch o.c.	OPTIONAL *DDP, DXC, DXF, or SR*	*Duotack* in ribbons spaced 6-inch o.c.	*Sentinel*	*H2O BA*	**-285 (Lim. 9)**
CW-A-14	-	Min. 1.5-inch *ISO s*, or *ISO+ x*	*Duotack* in ribbons spaced 6-inch o.c.	OPTIONAL *DDP, DXF, or SR*	*Duotack* in ribbons spaced 6-inch o.c.	*Sentinel HFB*	*D-SPF*	**-285 (Lim. 9)**

Assemblies with All Layers Adhered over Gypsum Deck (New or Existing)								
System No.	Vapor Barrier	Base Layer Insulation	Base Insulation Attachment	Top Layer Insulation	Top Insulation Attachment	Membrane	Attachment	*MDP* (psf)
G-A-1	*DXF* adhered with *Duotack* in ribbons spaced 12-inch o.c. under *VR HA, VR SV, VR SA* or one ply of *VR TA*	Min. 1.5-inch *ISO s*	*Duotack* in ribbons spaced 12-inch o.c.	OPTIONAL *DDP, DXC, DXF, ISO HD-H, or SR*	*Duotack* in ribbons spaced 12-inch o.c.	*Sentinel HFB*	*CR-20*	**-162.5 (Lim. 9)**
G-A-2	*DXF* adhered with *Duotack* in ribbons spaced 12-inch o.c. under *VR HA, VR SV, VR SA* or one ply of *VR TA*	Min. 1.5-inch *ISO-II*	*Duotack* in ribbons spaced 12-inch o.c.	OPTIONAL *DDP, DXC, DXF, ISO HD-H, or SR*	*Duotack* in ribbons spaced 12-inch o.c.	*Sentinel*	*H2O BA*	**-162.5 (Lim. 9)**
G-A-3	*DXF* adhered with *Duotack* in ribbons spaced 12-inch o.c. under *VR HA, VR SV, VR SA* or one ply of *VR TA*	Min. 1.5-inch *ISO s*, or *ISO+ x*	*Duotack* in ribbons spaced 12-inch o.c.	OPTIONAL *DDP, DXF, ISO HD-H, or SR*	*Duotack* in ribbons spaced 12-inch o.c.	*Sentinel HFB*	*D-SPF*	**-162.5 (Lim. 9)**

This evaluation report is provided for State of Florida product approval under Rule 61G20-3. The manufacturer shall notify CREEK Technical Services, LLC of any product changes or quality assurance changes throughout the duration for which this report is valid. This evaluation report does not express nor imply warranty, installation, recommended use, or other product attributes that are not specifically addressed herein.

Assemblies with All Layers Adhered over Gypsum Deck (New or Existing)								
System No.	Vapor Barrier	Base Layer Insulation	Base Insulation Attachment	Top Layer Insulation	Top Insulation Attachment	Membrane	Attachment	*MDP* (psf)
G-A-4	-	Min. 1.5-inch *ISO-II*	*Duotack* in ribbons spaced 12-inch o.c.	*ISO HD-H*	*Duotack* in ribbons spaced 12-inch o.c.	*Sentinel* or *Sentinel HFB*	*Sentinel: H2O BA Sentinel HFB: CR-20*	**-165 (Lim. 9)**
G-A-5	-	Min. 1.5-inch *ISO-II*	*Duotack* in ribbons spaced 12-inch o.c.	*ISO HD-H*	*Duotack* in ribbons spaced 12-inch o.c.	*Sentinel HFB*	*D-SPF*	**-165 (Lim. 9)**
G-A-6	*DXF* adhered with *Duotack* in ribbons spaced 6-inch o.c. under *VR HA, VR SV, VR SA* or one ply of *VR TA*	Min. 1.5-inch *ISO s*	*Duotack* in ribbons spaced 6-inch o.c.	OPTIONAL *DDP, DXC, DXF, or SR*	*Duotack* in ribbons spaced 6-inch o.c.	*Sentinel HFB*	*CR-20*	**-185 (Lim. 9)**
G-A-7	*DXF* adhered with *Duotack* in ribbons spaced 6-inch o.c. under *VR HA, VR SV, VR SA* or one ply of *VR TA*	Min. 1.5-inch *ISO-II*	*Duotack* in ribbons spaced 6-inch o.c.	OPTIONAL *DDP, DXC, DXF, or SR*	*Duotack* in ribbons spaced 6-inch o.c.	*Sentinel*	*H2O BA*	**-185 (Lim. 9)**
G-A-8	*DXF* adhered with *Duotack* in ribbons spaced 6-inch o.c. under *VR HA, VR SV, VR SA* or one ply of *VR TA*	Min. 1.5-inch *ISO s*, or *ISO+ x*	*Duotack* in ribbons spaced 6-inch o.c.	OPTIONAL *DDP, DXF, or SR*	*Duotack* in ribbons spaced 6-inch o.c.	*Sentinel HFB*	*D-SPF*	**-185 (Lim. 9)**
G-A-9	-	Min. 1.5-inch *ISO s*	*Duotack* in ribbons spaced 12-inch o.c.	OPTIONAL *DDP, DXC, DXF, or SR*	*Duotack* in ribbons spaced 12-inch o.c.	*Sentinel HFB*	*CR-20*	**-190 (Lim. 9)**
G-A-10	-	Min. 1.5-inch *ISO-II*	*Duotack* in ribbons spaced 12-inch o.c.	OPTIONAL *DDP, DXC, DXF, or SR*	*Duotack* in ribbons spaced 12-inch o.c.	*Sentinel*	*H2O BA*	**-190 (Lim. 9)**
G-A-11	-	Min. 1.5-inch *ISO s*, or *ISO+ x*	*Duotack* in ribbons spaced 12-inch o.c.	OPTIONAL *DDP, DXF, or SR*	*Duotack* in ribbons spaced 12-inch o.c.	*Sentinel HFB*	*D-SPF*	**-190 (Lim. 9)**
G-A-12	-	Min. 1.5-inch *ISO-II*	*Duotack* in ribbons spaced 6-inch o.c.	OPTIONAL *DDP, DXC, DXF, or SR*	*Duotack* in ribbons spaced 6-inch o.c.	*Sentinel*	*H2O BA*	**-190 (Lim. 9)**

This evaluation report is provided for State of Florida product approval under Rule 61G20-3. The manufacturer shall notify CREEK Technical Services, LLC of any product changes or quality assurance changes throughout the duration for which this report is valid. This evaluation report does not express nor imply warranty, installation, recommended use, or other product attributes that are not specifically addressed herein.

Assemblies with All Layers Adhered over Gypsum Deck (New or Existing)								
System No.	Vapor Barrier	Base Layer Insulation	Base Insulation Attachment	Top Layer Insulation	Top Insulation Attachment	Membrane	Attachment	*MDP* (psf)
G-A-13	-	Min. 1.5-inch *ISO s*, or *ISO+ x*	*Duotack* in ribbons spaced 6-inch o.c.	OPTIONAL *DDP, DXF, or SR*	*Duotack* in ribbons spaced 6-inch o.c.	*Sentinel HFB*	*D-SPF*	**-190 (Lim. 9)**

Adhered Lightweight Insulating Concrete Assemblies over *Concrete Deck* (New or Existing)					
System No.	Vapor Barrier	*LWIC*	Membrane	Membrane Attachment	*MDP* (psf)
LC-A-1	OPTIONAL 1 ply of ELASTOPHENE SP 2.2, ELASTOPHENE SP 3.0, SOPRALENE® 180 SP 3.0, SOPRALENE® 180 SP 3.5, SOPRALENE® 250 SP torched adhered to ASTM D 41 primed deck	Min. 300 psi Celcore MF with HS Rheology Admixture	*Sentinel* or *Sentinel HFB*	*Sentinel: H2O BA or S BA* *Sentinel HFB: CR-20*	**-45 (Lim. 9)**
LC-A-2	-	Min. 300 psi Elastizell with Zell-Crete Fibers	*Sentinel*	*H2O BA*	**-75 (Lim. 9)**
LC-A-3	-	Min. 310 psi Celcore MF with HS Rheology Admixture above Celcore S-1.	*Sentinel HFB*	*D-SPF*	**-82.5 (Lim. 9)**
LC-A-4	OPTIONAL 1 ply of ELASTOPHENE SP 2.2, ELASTOPHENE SP 3.0, SOPRALENE® 180 SP 3.0, SOPRALENE® 180 SP 3.5, SOPRALENE® 250 SP torched adhered to ASTM D 41 primed deck	Min. 285 psi Celcore MF with HS Rheology Admixture	*Sentinel* or *Sentinel HFB*	*Sentinel: H2O BA or S BA* *Sentinel HFB: CR-20*	**-82.5 (Lim. 9)**
LC-A-5	OPTIONAL 1 ply of ELASTOPHENE SP 2.2, ELASTOPHENE SP 3.0, SOPRALENE® 180 SP 3.0, SOPRALENE® 180 SP 3.5, SOPRALENE® 250 SP torched adhered to ASTM D 41 primed deck	Min. 306 psi Celcore MF with HS Rheology Admixture	*Sentinel* or *Sentinel HFB*	*Sentinel: H2O BA or S BA* *Sentinel HFB: CR-20*	**-90 (Lim. 9)**
LC-A-6	-	Min. 300 psi Elastizell with Zell-Crete Fibers	*Sentinel*	*S BA*	**-90 (Lim. 9)**
LC-A-7	1 ply of ELASTOPHENE SP 2.2, ELASTOPHENE SP 3.0, SOPRALENE® 180 SP 3.0, SOPRALENE® 180 SP 3.5, SOPRALENE® 250 SP torched adhered to ASTM D 41 primed deck	Min. 350 psi Celcore MF with HS Rheology Admixture	*Sentinel HFB*	*CR-20*	**-360 (Lim. 9)**
LC-A-8	-	Min. 350 psi Celcore MF with HS Rheology Admixture	*Sentinel HFB*	*CR-20*	**-367.5 (Lim. 9)**

This evaluation report is provided for State of Florida product approval under Rule 61G20-3. The manufacturer shall notify CREEK Technical Services, LLC of any product changes or quality assurance changes throughout the duration for which this report is valid. This evaluation report does not express nor imply warranty, installation, recommended use, or other product attributes that are not specifically addressed herein.

Adhered Lightweight Insulating Concrete Assemblies over *Concrete Deck* (New or Existing)					
System No.	Vapor Barrier	*LWIC*	Membrane	Membrane Attachment	*MDP* (psf)
LC-A-9	-	Min. 160 psi, 2-inch cellular lightweight concrete; *MCRF* ≥ 49 lbf with Trufast FM-90 Base Sheet Fastener	*Sentinel HFB*	*CR-20*	**-457.5 (Lim. 9; HVHZ only)**

Lightweight Insulating Concrete Assemblies with Adhered Membranes over *Concrete Deck* (New or Existing)								
System No.	*LWIC*	Vapor Retarder	Base Insulation	Top Insulation	Cover Board	Membrane	Membrane Attachment	*MDP* (psf)
LC-AM-1	Min. 360 psi Celcore MF with HS Rheology Admixture with min. 1/8-inch slurry, 2-inch EPS holey board, and min. 1-inch top coat	*Approved* vapor retarder	Min. 2-inch *ISO II* secured with *VERSA-FAST* (min. 1-inch embedment) with *2 fasteners per plate* secured at a rate of 1 fastener per 1.78ft^2	Min. 1-inch *ISO r, ISO s*¸or *ISO x* applied in Duotack 365 or Duotack SPF in ribbons spaced 12-inch o.c.	-	*Sentinel* or *Sentinel HFB*	*Sentinel: H2O BA or S BA Sentinel HFB: D-SPF*	**-37.5 (Lim. 7 Non-HVHZ)**
LC-AM-2	Min. 360 psi Celcore MF with HS Rheology Admixture with min. 1/8-inch slurry, 2-inch EPS holey board, and min. 1-inch top coat	*Approved* vapor retarder	Min. 2-inch *ISO II* secured with *VERSA-FAST* (min. 1-inch embedment) with *2 fasteners per plate* secured at a rate of 1 fastener per 1.78ft^2	OPTIONAL Min. 1-inch *ISO r, ISO s*¸or *ISO x* applied in Duotack 365 or Duotack SPF in ribbons spaced 12-inch o.c.	*SR* applied in Duotack 365 or Duotack SPF in ribbons spaced 12-inch o.c.	*Sentinel* or *Sentinel HFB*	*Sentinel: H2O BA or S BA Sentinel HFB: H2O BA* or *D-SPF*	**-37.5 (Lim. 7 Non-HVHZ)**
LC-AM-3	Min. 360 psi Celcore MF with HS Rheology Admixture with min. 1/8-inch slurry, 2-inch EPS holey board, and min. 1-inch top coat	*Approved* vapor retarder	Min. 2-inch *ISO II* secured with *VERSA-FAST* (min. 1-inch embedment) with *2 fasteners per plate* secured at a rate of 1 fastener per 1.78ft^2	OPTIONAL Min. 1-inch *ISO r, ISO s*¸or *ISO x* applied in Duotack 365 or Duotack SPF in ribbons spaced 12-inch o.c.	SOPRABOARD, *DDP*, or *DXF* applied in Duotack 365 or Duotack SPF in ribbons spaced 12-inch o.c.	*Sentinel HFB*	*D-SPF*	**-37.5 (Lim. 7 Non-HVHZ)**
LC-AM-4	Min. 300 psi *LWIC*	OPTIONAL *Approved* vapor retarder	OPTIONAL *Approved Insulation*	Min. 2-inch *ISO r, ISO s*¸or *ISO x* secured to the steel deck with *S Plates & #15 Fasteners* at a rate of *32 per 4 ft x 8 ft board*	-	*Sentinel HFB*	*D-SPF*	**-142.5 (Lim. 7)**

This evaluation report is provided for State of Florida product approval under Rule 61G20-3. The manufacturer shall notify CREEK Technical Services, LLC of any product changes or quality assurance changes throughout the duration for which this report is valid. This evaluation report does not express nor imply warranty, installation, recommended use, or other product attributes that are not specifically addressed herein.

Mechanically Fastened Lightweight Concrete Assemblies over *Concrete Deck* (New or Existing)						
System No.	*LWIC*	Insulation/ Base Sheet	Insulation Attachment	Membrane	Membrane Attachment	*MDP* (psf)
LC-M-1	Min. 410 psi Celcore MF with HS Rheology Admixture above Celcore S-1.	SOPRAFIX Base 622	*VERSA-FAST* with *2 fasteners per plate* secured 9-inch o.c. within the 5-inch wide side laps	*Sentinel HFB*	*D-SPF*	**-45 (Lim. 7 Non-HVHZ)**

Adhered Lightweight Insulating Concrete Assemblies over *Steel Deck* (New or Existing)					
System No.	Deck Detail	*LWIC*	Membrane	Membrane Attachment	*MDP* (psf)
LS-A-1	*G33, L5, P, S15*	Min. 300 psi Celcore MF with HS Rheology Admixture	*Sentinel* or *Sentinel HFB*	*Sentinel: H2O BA or S BA* *Sentinel HFB: CR-20*	**-45 (Lim. 9)**
LS-A-2	*G33, L6, P, S18*	Min. 310 psi Celcore MF with HS Rheology Admixture above Celcore S-1.	*Sentinel HFB*	*D-SPF*	**-82.5 (Lim. 9)**
LS-A-3	*G33, L6, P, S18*	Min. 285 psi Celcore MF with HS Rheology Admixture above Celcore S-1	*Sentinel* or *Sentinel HFB*	*Sentinel: H2O BA or S BA* *Sentinel HFB: CR-20*	**-82.5 (Lim. 9)**
LS-A-4	*G33, L5, P, S18*	Min. 306 psi Celcore MF with HS Rheology Admixture above Celcore S-1.	*Sentinel* or *Sentinel HFB*	*Sentinel: H2O BA or S BA* *Sentinel HFB: CR-20*	**-90 (Lim. 9)**
LS-A-5	*G33, L5*	Min. 310 psi *LWIC* with min. 2-inch EPS holey board; *MCRF* ≥ 104 lbf with Trufast FM-90 Base Sheet Fastener	*Sentinel HFB*	*CR-20*	**-137.5 (Lim. 9; HVHZ only)**

Lightweight Insulating Concrete Assemblies with Adhered Membranes over *Steel Deck* (New or Existing)									
System No.	Deck Detail	*LWIC*	Vapor Retarder	Base Insulation	Top Insulation	Cover Board	Membrane	Membrane Attachment	*MDP* (psf)
LS-AM-1	*G33, L5, F1W, S15*	Min. 360 psi Celcore MF with HS Rheology Admixture with min. 1/8-inch slurry, 2-inch EPS holey board, and min. 1-inch top coat	*Approved* vapor retarder	Min. 2-inch *ISO II* secured with *VERSA-FAST* (min. 1-inch embedment) with *2 fasteners per plate* secured at a rate of 1 fastener per 1.78ft^2	Min 1-inch *ISO r, ISO s*, or *ISO x* applied in Duotack 365 or Duotack SPF in ribbons spaced 12-inch o.c.	-	*Sentinel* or *Sentinel HFB*	*Sentinel: H2O BA or S BA* *Sentinel HFB: D-SPF*	**-37.5 (Lim. 7 Non-HVHZ)**

This evaluation report is provided for State of Florida product approval under Rule 61G20-3. The manufacturer shall notify CREEK Technical Services, LLC of any product changes or quality assurance changes throughout the duration for which this report is valid. This evaluation report does not express nor imply warranty, installation, recommended use, or other product attributes that are not specifically addressed herein.

Lightweight Insulating Concrete Assemblies with Adhered Membranes over *Steel Deck* (New or Existing)									
System No.	Deck Detail	*LWIC*	Vapor Retarder	Base Insulation	Top Insulation	Cover Board	Membrane	Membrane Attachment	*MDP* (psf)
LS-AM-2	*G33, L5, F1W, S15*	Min. 360 psi Celcore MF with HS Rheology Admixture with min. 1/8-inch slurry, 2-inch EPS holey board, and min. 1-inch top coat	*Approved* vapor retarder	Min. 2-inch *ISO II* secured with *VERSA-FAST* (min. 1-inch embedment) with *2 fasteners per plate* secured at a rate of 1 fastener per 1.78ft^2	OPTIONAL Min 1-inch *ISO r, ISO s*, or *ISO x* applied in Duotack 365 or Duotack SPF in ribbons spaced 12-inch o.c.	*SR* applied in Duotack 365 or Duotack SPF in ribbons spaced 12-inch o.c.	*Sentinel* or *Sentinel HFB*	*Sentinel: H2O BA or S BA Sentinel HFB: H2O BA*or *D-SPF*	**-37.5 (Lim. 7 Non-HVHZ)**
LS-AM-3	*G33, L5, F1W, S15*	Min. 360 psi Celcore MF with HS Rheology Admixture with min. 1/8-inch slurry, 2-inch EPS holey board, and min. 1-inch top coat	*Approved* vapor retarder	Min. 2-inch *ISO II* secured with *VERSA-FAST* (min. 1-inch embedment) with *2 fasteners per plate* secured at a rate of 1 fastener per 1.78ft^2	OPTIONAL Min. 1-inch *ISO r, ISO s*, or *ISO x* applied in Duotack 365 or Duotack SPF in ribbons spaced 12-inch o.c.	SOPRABOARD, *DDP*, or *DXF* applied in Duotack 365 or Duotack SPF in ribbons spaced 12-inch o.c.	*Sentinel HFB*	*D-SPF*	**-37.5 (Lim. 7 Non-HVHZ)**
LS-AM-4	*G33, L6, P, S24*	Min. 300 psi *LWIC*	OPTIONAL *Approved* vapor retarder	OPTIONAL *Approved Insulation*	Min 2-inch *ISO r, ISO s*, or *ISO x* secured to the steel deck with *S Plates & #15 Fasteners* at a rate of *32 per 4 ft x 8 ft board*	-	*Sentinel HFB*	*D-SPF*	**-142.5 (Lim. 7)**

Mechanically Fastened Lightweight Concrete Assemblies over *Steel Deck* (New or Existing)							
System No.	Deck Detail	*LWIC*	Insulation/ Base Sheet	Insulation Attachment	Membrane	Membrane Attachment	*MDP* (psf)
LS-M-1	*G33*	Min. 410 psi Celcore MF with HS Rheology Admixture above Celcore S-1.	SOPRAFIX Base 622	*VERSA-FAST* with *2 fasteners per plate* secured 9-inch o.c. within the 5-inch wide side laps	*Sentinel HFB*	*D-SPF*	**-45 (Lim. 7 Non-HVHZ)**

This evaluation report is provided for State of Florida product approval under Rule 61G20-3. The manufacturer shall notify CREEK Technical Services, LLC of any product changes or quality assurance changes throughout the duration for which this report is valid. This evaluation report does not express nor imply warranty, installation, recommended use, or other product attributes that are not specifically addressed herein.

Adhered *Recover* Assemblies						
System No.	Existing Roof	Insulation	Insulation Attachment	Membrane	Membrane Attachment	*MDP* (psf)
R-A-1	*Steel Deck* (*G33, L6, F1, S24*)	Min. 0.5-inch *SR*	PERLOK #12 DP Fasteners and PERLOK 3" Metal Insulation Plates fastened at a rate of *32 per 4 ft x 8 ft board*	*Sentinel* or *Sentinel HFB*	*Sentinel: H2O BA or S BA* *Sentinel HFB: CR-20*	**-82.5 (Lim. 7)**
R-A-2	Existing roof over *Steel Deck* (*G33*)	Min 2-inch *ISO r, ISO s*, or *ISO x*	Secured to the steel deck with *S Plates & #15 Fasteners* at a rate of *32 per 4 ft x 8 ft board*	*Sentinel HFB*	*D-SPF*	**-142.5 (Lim. 7)**

Mechanically Fastened *Recover* Assemblies						
System No.	Existing Roof	Insulation	Insulation Attachment	Membrane	Membrane Attachment	*MDP* (psf)
R-M-1	*Steel Deck* *(G33, L6, F1, S24)*	OPTIONAL *Approved Insulation*	Preliminarily secured	*Sentinel* (120-inch wide)	*#15 Fastener* and 2.4" Seam Plates fastened 12-inch o.c. within 4-inch wide laps spaced 116-inch o.c.	**-45 (Lim. 7)**
R-M-2	*Wood Deck* *(T19/32, L24, 0.113-6/6)*	-	-	*Sentinel*	*#15 Fastener* and 2.4" Seam Plates fastened 6-inch o.c. within 6-inch wide laps spaced 114-inch o.c.; fastener centered 1.25-inches from edge of tab	**-45 (Lim. 7)**
R-M-3	*Steel Deck* *(G33, L6, PW or F1, S24)*	-	-	*Sentinel*	*#15 Fastener* and 2.4" Seam Plates fastened 6-inch o.c. within 6-inch wide laps spaced 114-inch o.c.; fastener centered 1.25-inches from edge of tab	**-45 (Lim. 7)**
R-M-4	*Steel Deck* *(G33, L6, PW, S24)*	-	-	*Sentinel*	*#15 Fastener* and 2.4" Seam Plate fastened 6-inch o.c. within 6-inch wide laps spaced 54-inch o.c.; fastener centered 1.25-inches from edge of tab	**-52.5 (Lim. 7)**
R-M-5	*Steel Deck* *(G33, L6, F1, S24)*	-	-	*Sentinel*	*#15 Fastener* and 2.4" Seam Plates fastened 6-inch o.c. within 6-inch wide laps spaced 54-inch o.c.; fastener centered 1.25-inches from edge of tab	**-67.5 (Lim. 7)**

Induction Welded *Recover* Assemblies						
System No.	Existing Roof	Insulation	Insulation Attachment	Membrane	Membrane Attachment	*MDP* (psf)
R-W-1	Metal Roof System attached to Min. 16 ga. steel purlins spaced max. 5-ft o.c.	*Approved Insulation*	Preliminarily secured	*Sentinel*	Induction welded to SFS Purlin Fasteners with SENTINEL isoweld Plates secured 12-inch o.c. along the steel purlins	**-45 (Lim. 7)**

This evaluation report is provided for State of Florida product approval under Rule 61G20-3. The manufacturer shall notify CREEK Technical Services, LLC of any product changes or quality assurance changes throughout the duration for which this report is valid. This evaluation report does not express nor imply warranty, installation, recommended use, or other product attributes that are not specifically addressed herein.

Induction Welded *Recover* Assemblies						
System No.	Existing Roof	Insulation	Insulation Attachment	Membrane	Membrane Attachment	*MDP* (psf)
R-W-2	Metal Roof System attached to Min. 16 ga. steel purlins spaced max. 5-ft o.c.	*Approved Insulation*	Preliminarily secured	*Sentinel*	Induction welded to PERLOK Induction Weld Plates with Trufast #12 Purlin Fasteners secured 12-inch o.c. along the steel purlins	**-45 (Lim. 7)**
R-W-3	Metal Roof System attached to Min. 16 ga. steel purlins spaced max. 4-ft o.c.	*Approved Insulation*	Preliminarily secured	*Sentinel*	Induction welded to PERLOK Induction Weld Plates with Trufast #12 Purlin Fasteners secured 12-inch o.c. along the steel purlins	**-52.5 (Lim. 7)**
R-W-4	Metal Roof System attached to Min. 16 ga. steel purlins spaced max. 3-ft o.c.	*Approved Insulation*	Preliminarily secured	*Sentinel*	Induction welded to PERLOK Induction Weld Plates with Trufast #12 Purlin Fasteners secured 12-inch o.c. along the steel purlins	**-60 (Lim. 7)**
R-W-5	Metal Roof System attached to Min. 16 ga. steel purlins spaced max. 5-ft o.c.	*Approved Insulation*	Preliminarily secured	*Sentinel*	Induction welded to PERLOK Induction Weld Plates with Trufast #12 Purlin Fasteners secured 6-inch o.c. along the steel purlins	**-75 (Lim. 7)**
R-W-6	Metal Roof System attached to Min. 16 ga. steel purlins spaced max. 4-ft o.c.	*Approved Insulation*	Preliminarily secured	*Sentinel*	Induction welded to PERLOK Induction Weld Plates with Trufast #12 Purlin Fasteners secured 6-inch o.c. along the steel purlins	**-90 (Lim. 7)**
R-W-7	Metal Roof System attached to Min. 16 ga. steel purlins spaced max. 5-ft o.c.	*Approved Insulation*	Preliminarily secured	*Sentinel*	Induction welded to SFS Purlin Fasteners with SENTINEL isoweld Plates secured 6-inch o.c. along the steel purlins	**-90 (Lim. 7)**
R-W-8	Metal Roof System attached to Min. 16 ga. steel purlins spaced max. 3-ft o.c.	*Approved Insulation*	Preliminarily secured	*Sentinel*	Induction welded to PERLOK Induction Weld Plates with Trufast #12 Purlin Fasteners secured 6-inch o.c. along the steel purlins	**-112.5 (Lim. 7)**

This evaluation report is provided for State of Florida product approval under Rule 61G20-3. The manufacturer shall notify CREEK Technical Services, LLC of any product changes or quality assurance changes throughout the duration for which this report is valid. This evaluation report does not express nor imply warranty, installation, recommended use, or other product attributes that are not specifically addressed herein.

Assemblies with All Layers Adhered over *Steel Deck* (New or Existing)									
System No.	Deck Detail	Vapor Barrier	Base Layer Insulation	Base Insulation Attachment	Top Layer Insulation	Top Insulation Attachment	Membrane	Attachment	*MDP* (psf)
S-A-1	*G33*	*DXF* adhered with *Duotack* in ribbons spaced 12-inch o.c. under *VR HA, VR SV, VR SA* or one ply of *VR TA*	*ISO s* or *ISO r*	*Duotack* in ribbons spaced 12-inch o.c.	OPTIONAL *DDP, DXC, DXF, ISO HD-H, or SR*	*Duotack* in ribbons spaced 12-inch o.c.	*Sentinel HFB*	*CR-20*	**-127.5 (Lim. 9)**
S-A-2	*G33*	*DXF* adhered with *Duotack* in ribbons spaced 12-inch o.c. under *VR HA, VR SV, VR SA* or one ply of *VR TA*	*ISO-II*	*Duotack* in ribbons spaced 12-inch o.c.	OPTIONAL *DDP, DXC, DXF, ISO HD-H, or SR*	*Duotack* in ribbons spaced 12-inch o.c.	*Sentinel* or *Sentinel HFB*	*H2O BA*	**-127.5 (Lim. 9)**
S-A-3	*G33*	*DXF* adhered with *Duotack* in ribbons spaced 12-inch o.c. under *VR HA, VR SV, VR SA* or one ply of *VR TA*	*ISO s*, or *ISO+ x*	*Duotack* in ribbons spaced 12-inch o.c.	OPTIONAL *DDP, DXF, ISO HD-H, or SR*	*Duotack* in ribbons spaced 12-inch o.c.	*Sentinel HFB*	*D-SPF*	**-127.5 (Lim. 9)**
S-A-4	*G33*	-	*ISO s* or *ISO r*	*Duotack* in ribbons spaced 12-inch o.c.	OPTIONAL *DDP, DXC, DXF, ISO HD-H or SR*	*Duotack* in ribbons spaced 12-inch o.c.	*Sentinel HFB*	*CR-20*	**-127.5 (Lim. 9)**
S-A-5	*G33*	-	*ISO-II*	*Duotack* in ribbons spaced 12-inch o.c.	OPTIONAL *DDP, DXC, DXF, ISO HD-H or SR*	*Duotack* in ribbons spaced 12-inch o.c.	*Sentinel*	*H2O BA*	**-127.5 (Lim. 9)**
S-A-6	*G33*	-	*ISO s*, or *ISO+ x*	*Duotack* in ribbons spaced 12-inch o.c.	OPTIONAL *DDP, DXF, ISO HD-H or SR*	*Duotack* in ribbons spaced 12-inch o.c.	*Sentinel HFB*	*D-SPF*	**-127.5 (Lim. 9)**

This evaluation report is provided for State of Florida product approval under Rule 61G20-3. The manufacturer shall notify CREEK Technical Services, LLC of any product changes or quality assurance changes throughout the duration for which this report is valid. This evaluation report does not express nor imply warranty, installation, recommended use, or other product attributes that are not specifically addressed herein.

Assemblies with Adhered Membranes over *Steel Deck* (New, Existing, or *Recover*)										
System No.	Deck Detail	Thermal Barrier or Base Layer Insulation	Thermal Barrier or Base Layer Attachment	Vapor Retarder	Top Layer Insulation	Top Insulation Attachment	Coverboard	Membrane	Attachment	*MDP* (psf)
S-AM-1	*G33*	Min. 0.5-inch *DD,DDP or SR*	*S Plates & Fasteners or S Plates & #15 Fasteners* secured at a rate of 1 fastener per 4-ft^2	*VR TA, VR SV, VR SA, VR HA, VR EF, or VR CV*	Min 1.5-inch *ISO r* or *ISO s*	*Duotack* ribbon adhered 12-inch o.c.	OPTIONAL *DDP or SR* adhered in *Duotack* ribbons spaced 12-inch o.c.	*Sentinel*	*H2O BA or S BA*	**-45 (Lim. 9)**
S-AM-2	*G33*	Min. 0.5-inch *DD,DDP or SR*	*S Plates & Fasteners or S Plates & #15 Fasteners* secured at a rate of 1 fastener per 4-ft^2	*VR TA, VR SV, VR SA, VR HA, VR EF, or VR CV*	Min 1.5-inch *ISO s*	*Duotack* ribbon adhered 12-inch o.c.	OPTIONAL *DDP or SR* adhered in *Duotack* ribbons spaced 12-inch o.c.	*Sentinel HFB*	*D-SPF*	**-45 (Lim. 9)**
S-AM-3	*G33*	OPTIONAL *DD, DDP, DX, DXF,* or *DXC*	Simultaneously secured with top layer	-	Min 2.0-inch *ISO r* or *ISO s*	*S Plates & Fasteners or S Plates & #15 Fasteners* secured at a rate of 1 fastener per 4.00ft^2	OPTIONAL *DDP or SR* adhered in *Duotack* ribbons spaced 12-inch o.c.	*Sentinel*	*H2O BA or S BA*	**-45 (Lim. 9)**
S-AM-4	*G33*	OPTIONAL *DD, DDP, DX, DXF,* or *DXC*	Simultaneously secured with top layer	-	Min 2.0-inch *ISO s*	*S Plates & Fasteners or S Plates & #15 Fasteners* secured at a rate of 1 fastener per 4.00ft^2	OPTIONAL *DDP or SR* adhered in *Duotack* ribbons spaced 12-inch o.c.	*Sentinel HFB*	*D-SPF*	**-45 (Lim. 9)**
S-AM-5	*G33*	OPTIONAL *DD, DDP, DX, DXF,* or *DXC*	Simultaneously secured with top layer	-	OPTIONAL *Approved Insulation*	Simultaneously secured with coverboard	Min. 0.5-inch *DDP* or *SR* attached with *S Plates & Fasteners or S Plates & #15 Fasteners* secured at a rate of 1 fastener per 4.00ft^2	*Sentinel*	*H2O BA or S BA*	**-45 (Lim. 7; Non-HVHZ)**

This evaluation report is provided for State of Florida product approval under Rule 61G20-3. The manufacturer shall notify CREEK Technical Services, LLC of any product changes or quality assurance changes throughout the duration for which this report is valid. This evaluation report does not express nor imply warranty, installation, recommended use, or other product attributes that are not specifically addressed herein.

Assemblies with Adhered Membranes over *Steel Deck* (New, Existing, or *Recover*)										
System No.	Deck Detail	Thermal Barrier or Base Layer Insulation	Thermal Barrier or Base Layer Attachment	Vapor Retarder	Top Layer Insulation	Top Insulation Attachment	Coverboard	Membrane	Attachment	*MDP* (psf)
S-AM-6	*G33*	OPTIONAL *DD*, *DDP*, *DX*, *DXF*, or *DXC*	Simultaneously secured with top layer	-	OPTIONAL *Approved Insulation*	Simultaneously secured with coverboard	Min. 0.5-inch *DDP* or *SR* attached with *S Plates & Fasteners or S Plates & #15 Fasteners* secured at a rate of 1 fastener per 4.00ft^2	*Sentinel HFB*	*D-SPF*	**-45 (Lim. 7; Non-HVHZ)**
S-AM-7	*G33*	OPTIONAL *DD*, *DDP*, *DX*, *DXF*, or *DXC*	Simultaneously secured with top layer	-	Min. 1.5-inch *Approved Insulation*	Simultaneously secured with top layer	Min 0.5-inch *DDP* secured with *S Plates & Fasteners or S Plates & #15 Fasteners* secured at a rate of 1 fastener per 4.00ft^2	*Sentinel*	*H2O BA or S BA*	**-45 (Lim. 7; Non-HVHZ)**
S-AM-8	*G33*	OPTIONAL *DD*, *DDP*, *DX*, *DXF*, or *DXC*	Simultaneously secured with top layer	-	Min. 1.5-inch *Approved Insulation*	Simultaneously secured with top layer	Min 0.5-inch *DDP* secured with *S Plates & Fasteners or S Plates & #15 Fasteners* secured at a rate of 1 fastener per 4.00ft^2	*Sentinel HFB*	*D-SPF*	**-45 (Lim. 7; Non-HVHZ)**
S-AM-9	*G33*	OPTIONAL *Approved Insulation*	Simultaneously secured with top layer	-	Min. 0.5-inch *DXF*	PERLOK #12 DP Fasteners and PERLOK 3" Metal Insulation Plates fastened at a rate of 1 fastener per 4.00ft^2	-	*Sentinel*	*H2O BA*	**-45 (Lim. 7; Non-HVHZ)**

This evaluation report is provided for State of Florida product approval under Rule 61G20-3. The manufacturer shall notify CREEK Technical Services, LLC of any product changes or quality assurance changes throughout the duration for which this report is valid. This evaluation report does not express nor imply warranty, installation, recommended use, or other product attributes that are not specifically addressed herein.

Assemblies with Adhered Membranes over *Steel Deck* (New, Existing, or *Recover*)										
System No.	Deck Detail	Thermal Barrier or Base Layer Insulation	Thermal Barrier or Base Layer Attachment	Vapor Retarder	Top Layer Insulation	Top Insulation Attachment	Coverboard	Membrane	Attachment	*MDP* (psf)
S-AM-10	*G33*	OPTIONAL *Approved Insulation*	Simultaneously secured with top layer	-	Min. 0.5-inch *DXF*	PERLOK #12 DP Fasteners and PERLOK 3" Metal Insulation Plates fastened at a rate of 1 fastener per 4.00ft^2	-	*Sentinel HFB*	*D-SPF*	**-45 (Lim. 7; Non-HVHZ)**
S-AM-11	*G33*	OPTIONAL *Approved Insulation*	Simultaneously secured with top layer	-	*DXF*	*S Plates & Fasteners* secured at a rate of *12 per 4 ft x 8 ft board*	-	*Sentinel*	*H2O BA*	**-45 (Lim. 7; Non-HVHZ)**
S-AM-12	*G33*	OPTIONAL *Approved Insulation*	Simultaneously secured with top layer	-	*DXF*	*S Plates & Fasteners* secured at a rate of *12 per 4 ft x 8 ft board*	-	*Sentinel HFB*	*D-SPF*	**-45 (Lim. 7; Non-HVHZ)**
S-AM-13	*G33*	OPTIONAL *Approved Insulation*	Simultaneously secured with top layer	-	*DXC*	PERLOK #12 DP Fasteners and PERLOK 3" Metal Insulation Plates fastened at a rate of 1 fastener per 2.67ft^2	-	*Sentinel*	*H2O BA*	**-45 (Lim. 7; Non-HVHZ)**
S-AM-14	*G33*	OPTIONAL *Approved Insulation*	Simultaneously secured with top layer	-	Min. 0.5-inch *DXF*	PERLOK #12 DP Fasteners and PERLOK 3" Metal Insulation Plates fastened at a rate of 1 fastener per 4.00ft^2	-	*Sentinel* or *Sentinel HFB*	*Sentinel: H2O BA Sentinel HFB: CR-20* or *D-SPF*	**-45 (Lim. 7; Non-HVHZ)**
S-AM-15	*G33*	OPTIONAL *Approved Insulation*	Simultaneously secured with top layer	-	*DXF*	*S Plates & Fasteners* secured at a rate of 1 fastener per 2.67ft^2	-	*Sentinel* or *Sentinel HFB*	*Sentinel: H2O BA Sentinel HFB: CR-20* or *D-SPF*	**-45 (Lim. 7; Non-HVHZ)**

This evaluation report is provided for State of Florida product approval under Rule 61G20-3. The manufacturer shall notify CREEK Technical Services, LLC of any product changes or quality assurance changes throughout the duration for which this report is valid. This evaluation report does not express nor imply warranty, installation, recommended use, or other product attributes that are not specifically addressed herein.

Assemblies with Adhered Membranes over *Steel Deck* (New, Existing, or *Recover*)										
System No.	Deck Detail	Thermal Barrier or Base Layer Insulation	Thermal Barrier or Base Layer Attachment	Vapor Retarder	Top Layer Insulation	Top Insulation Attachment	Coverboard	Membrane	Attachment	*MDP* (psf)
S-AM-16	*G33*	OPTIONAL *Approved Insulation*	Simultaneously secured with top layer	-	*DXC*	PERLOK #12 DP Fasteners and PERLOK 3" Metal Insulation Plates fastened at a rate of 1 fastener per 2.67ft^2	-	*Sentinel* or *Sentinel HFB*	*Sentinel: H2O BA Sentinel HFB: CR-20*	**-45 (Lim. 7; Non-HVHZ)**
S-AM-17	*G33*	Min 0.5-inch *DDP* or *SR*	*S Plates & Fasteners* secured at a rate of 1 fastener per 4.00ft^2	*VR TA, VR SA, VR HA, VR EF, or VR SV*	Min. 1.5-inch *ISO s* or *ISO r*	*Duotack* applied 12-inch o.c	OPTIONAL *DDP, DXC, DXF or SR* secured with *Duotack* applied 12-inch o.c. (Coverboard REQUIRED over *ISO x or ISO r)*	*Sentinel HFB*	*CR-20*	**-45 (Lim. 7; Non-HVHZ)**
S-AM-18	*G33*	Min 0.5-inch *DDP* or *SR*	*S Plates & Fasteners* secured at a rate of 1 fastener per 4.00ft^2	*VR TA, VR SA, VR HA, VR EF, or VR SV*	Min. 1.5-inch *ISO-II*	*Duotack* applied 12-inch o.c	OPTIONAL *DDP, DXC, DXF or SR* secured with *Duotack* applied 12-inch o.c. (Coverboard REQUIRED over *ISO x or ISO r)*	*Sentinel* or *Sentinel HFB*	*Sentinel: H2O BA or S BA Sentinel HFB: H2O BA*	**-45 (Lim. 7; Non-HVHZ)**
S-AM-19	*G33*	Min 0.5-inch *DDP* or *SR*	*S Plates & Fasteners* secured at a rate of 1 fastener per 4.00ft^2	*VR TA, VR SA, VR HA, VR EF, or VR SV*	Min. 1.5-inch *ISO s* or *ISO+ x*	*Duotack* applied 12-inch o.c	OPTIONAL *DDP, DXF or SR* secured with *Duotack* applied 12-inch o.c.	*Sentinel HFB*	*D-SPF*	**-45 (Lim. 7; Non-HVHZ)**
S-AM-20	*G33*	OPTIONAL *DD, DDP, DX, DXF,* or *DXC*	-	-	Min. 2-inch *ISO s*, *ISO r* or *ISO+ x*	*S Plates & Fasteners* secured at a rate of 1 fastener per 4.00ft^2	OPTIONAL *DDP, DXC, DXF* or *SR* secured with *Duotack* applied 12-inch o.c. (Coverboard REQUIRED over *ISO x or ISO r)*	*Sentinel HFB*	*CR-20*	**-45 (Lim. 7; Non-HVHZ)**

This evaluation report is provided for State of Florida product approval under Rule 61G20-3. The manufacturer shall notify CREEK Technical Services, LLC of any product changes or quality assurance changes throughout the duration for which this report is valid. This evaluation report does not express nor imply warranty, installation, recommended use, or other product attributes that are not specifically addressed herein.

Assemblies with Adhered Membranes over *Steel Deck* (New, Existing, or *Recover*)										
System No.	Deck Detail	Thermal Barrier or Base Layer Insulation	Thermal Barrier or Base Layer Attachment	Vapor Retarder	Top Layer Insulation	Top Insulation Attachment	Coverboard	Membrane	Attachment	*MDP* (psf)
S-AM-21	*G33*	OPTIONAL *DD*, *DDP*, *DX*, *DXF*, or *DXC*	-	-	Min. 2-inch *ISO s*, *ISO r* or *ISO+ x*	*S Plates & Fasteners* secured at a rate of 1 fastener per 4.00ft^2	OPTIONAL *DDP*, *DXC*, *DXF* or *SR* secured with *Duotack* applied 12-inch o.c. (Coverboard REQUIRED over *ISO x or ISO r)*	*Sentinel* or *Sentinel HFB*	*Sentinel: H2O BA or S BA Sentinel HFB: H2O BA*	**-45 (Lim. 7; Non-HVHZ)**
S-AM-22	*G33*	OPTIONAL *DD*, *DDP*, *DX*, *DXF*, or *DXC*	-	-	Min. 2-inch *ISO s* or *ISO+ x*	*S Plates & Fasteners* secured at a rate of 1 fastener per 4.00ft^2	OPTIONAL *DDP*, *DXF* or *SR* secured with *Duotack* applied 12-inch o.c.	*Sentinel HFB*	*D-SPF*	**-45 (Lim. 7; Non-HVHZ)**
S-AM-23	*G33*	OPTIONAL *DD*, *DDP*, *DX*, *DXF*, or *DXC*	-	-	Min. 2-inch *ISO s* or *ISO r*	*S Plates & Fasteners* secured at a rate of 1 fastener per 4.00ft^2	OPTIONAL *DDP*, *DXC*, *DXF*, *or SR* secured with *D-SPF* applied 12-inch o.c. (Coverboard REQUIRED over *ISO r)*	*Sentinel* or *Sentinel HFB*	*Sentinel: H2O BA or S BA Sentinel HFB: H2O BA or CR-20*	**-45 (Lim. 7; Non-HVHZ)**
S-AM-24	*G33*	OPTIONAL *DD*, *DDP*, *DX*, *DXF*, or *DXC*	-	-	Min. 2-inch *ISO s*	*S Plates & Fasteners* secured at a rate of 1 fastener per 4.00ft^2	OPTIONAL *DDP*, *DXF*, *or SR* secured with *D-SPF* applied 12-inch o.c.	*Sentinel HFB*	*D-SPF*	**-45 (Lim. 7; Non-HVHZ)**
S-AM-25	*G33*	OPTIONAL *DD*, *DDP*, *DX*, *DXF*, or *DXC*	-	-	Min. 2-inch *ISO s* or *ISO r*	*S Plates & Fasteners* secured at a rate of 1 fastener per 4.00ft^2	*DDP*, *DXF*, *or SR* secured with *D-SPF* applied 12-inch o.c.	*Sentinel HFB*	*D-SPF*	**-45 (Lim. 7; Non-HVHZ)**

This evaluation report is provided for State of Florida product approval under Rule 61G20-3. The manufacturer shall notify CREEK Technical Services, LLC of any product changes or quality assurance changes throughout the duration for which this report is valid. This evaluation report does not express nor imply warranty, installation, recommended use, or other product attributes that are not specifically addressed herein.

Assemblies with Adhered Membranes over *Steel Deck* (New, Existing, or *Recover*)										
System No.	Deck Detail	Thermal Barrier or Base Layer Insulation	Thermal Barrier or Base Layer Attachment	Vapor Retarder	Top Layer Insulation	Top Insulation Attachment	Coverboard	Membrane	Attachment	*MDP* (psf)
S-AM-26	*G33, L6, F1, S12*	OPTIONAL *DD, DDP, DX, DXF,* or *DXC*	Simultaneously secured with top layer	-	Min. 1.5-inch *Approved Insulation*	Simultaneously secured with top layer	*DDP* secured with *S Plates & Fasteners, S Plates & #12 Fasteners,* or *S Plates & #15 Fasteners* secured at a rate of 1 fastener per 1.78ft^2	*Sentinel* or *Sentinel HFB*	*Sentinel: H2O BA or S BA Sentinel HFB: H2O BA,CR-20,* or *D-SPF*	**-52.5 (Lim. 7)**
S-AM-27	*G33, L6, F1, S12*	OPTIONAL *DD, DDP, DX, DXF,* or *DXC*	Simultaneously secured with top layer	-	Min. 1.5-inch *Approved Insulation*	Simultaneously secured with top layer	Min 0.5-inch *DDP* secured with *S Plates & Fasteners, S Plates & #12 Fasteners,* or *S Plates & #15 Fasteners* secured at a rate of 1 fastener per 1.78ft^2	*Sentinel* or *Sentinel HFB*	*Sentinel: H2O BA or S BA Sentinel HFB: H2O BA,CR-20,* or *D-SPF*	**-67.5 (Lim. 7)**
S-AM-28	*G33, L6, F1, S12*	OPTIONAL *DD, DDP, DX, DXF,* or *DXC*	Simultaneously secured with top layer	-	Min. 1.5-inch *Approved Insulation*	Simultaneously secured with top layer	Min 0.5-inch *DDP* secured with *S Plates & Fasteners, S Plate & #12 Fasteners,* or *S Plates & #15 Fasteners* secured at a rate of 1 fastener per 1.6ft^2	*Sentinel* or *Sentinel HFB*	*Sentinel: H2O BA or S BA Sentinel HFB: H2O BA,CR-20,* or *D-SPF*	**-75 (Lim. 7)**

This evaluation report is provided for State of Florida product approval under Rule 61G20-3. The manufacturer shall notify CREEK Technical Services, LLC of any product changes or quality assurance changes throughout the duration for which this report is valid. This evaluation report does not express nor imply warranty, installation, recommended use, or other product attributes that are not specifically addressed herein.

Assemblies with Adhered Membranes over *Steel Deck* (New, Existing, or *Recover*)										
System No.	Deck Detail	Thermal Barrier or Base Layer Insulation	Thermal Barrier or Base Layer Attachment	Vapor Retarder	Top Layer Insulation	Top Insulation Attachment	Coverboard	Membrane	Attachment	*MDP* (psf)
S-AM-29	*G33, L6, F1, S24*	Min. 1.5-inch *Approved Insulation*	Simultaneously secured with top layer	-	OPTIONAL *Insulation*	Min. 0.5-inch *SR*	SOPREMA® DP #12 Fasteners and PERLOK 3" Metal Insulation Plates fastened at a rate of 1 fastener per 1.00ft^2	*Sentinel* or *Sentinel HFB*	*Sentinel: H2O BA or S BA Sentinel HFB: D-SPF*	**-82.5 (Lim. 7)**
S-AM-30	*G33, L6, F1, S24*	Min. 0.5-inch *DD, DDP or SR*	*S Plates & Fasteners or S Plates & #15 Fasteners* secured at a rate of *1 fastener per 2-ft^2*	*VR TA, VR SV, VR SA, VR HA, VR EF, or VR CV*	Min 1.5-inch *ISO r* or *ISO s*	*Duotack* ribbon adhered 12-inch o.c.	OPTIONAL *DDP or SR* adhered in *Duotack* ribbons spaced 12-inch o.c.	*Sentinel*	*H2O BA or S BA*	**-82.5 (Lim. 7)**
S-AM-31	*G33, L6, F1, S24*	Min. 0.5-inch *DD, DDP or SR*	*S Plates & Fasteners or S Plates & #15 Fasteners* secured at a rate of 1 fastener per 2-ft^2	*VR TA, VR SV, VR SA, VR HA, VR EF, or VR CV*	Min 1.5-inch *ISO s*	*Duotack* ribbon adhered 12-inch o.c.	OPTIONAL *DDP or SR* adhered in *Duotack* ribbons spaced 12-inch o.c.	*Sentinel HFB*	*D-SPF*	**-82.5 (Lim. 7)**
S-AM-32	*G33, L6, F1, S24*	OPTIONAL *DD, DDP, DX, DXF,* or *DXC*	Simultaneously secured with top layer	-	Min 2.0-inch *ISO r* or *ISO s*	*S Plates & Fasteners or S Plates & #15 Fasteners* secured at a rate of 1 fastener per 1.6ft^2	OPTIONAL *DDP or SR* adhered in *Duotack* ribbons spaced 12-inch o.c.	*Sentinel*	*H2O BA or S BA*	**-82.5 (Lim. 7)**
S-AM-33	*G33, L6, F1, S24*	OPTIONAL *DD, DDP, DX, DXF,* or *DXC*	Simultaneously secured with top layer	-	Min 2.0-inch *ISO s*	*S Plates & Fasteners or S Plates & #15 Fasteners* secured at a rate of 1 fastener per 1.6ft^2	OPTIONAL *DDP or SR* adhered in *Duotack* ribbons spaced 12-inch o.c.	*Sentinel HFB*	*D-SPF*	**-82.5 (Lim. 7)**

This evaluation report is provided for State of Florida product approval under Rule 61G20-3. The manufacturer shall notify CREEK Technical Services, LLC of any product changes or quality assurance changes throughout the duration for which this report is valid. This evaluation report does not express nor imply warranty, installation, recommended use, or other product attributes that are not specifically addressed herein.

Assemblies with Adhered Membranes over *Steel Deck* (New, Existing, or *Recover*)										
System No.	Deck Detail	Thermal Barrier or Base Layer Insulation	Thermal Barrier or Base Layer Attachment	Vapor Retarder	Top Layer Insulation	Top Insulation Attachment	Coverboard	Membrane	Attachment	*MDP* (psf)
S-AM-34	*G33, L6, F2, S12*	OPTIONAL *DD, DDP, DX, DXF,* or *DXC*	Simultaneously secured with top layer	-	Min. 1.5-inch *Approved Insulation*	Simultaneously secured with top layer	Min 0.5-inch *DDP* secured with *S Plates & Fasteners, S Plates & #12 Fasteners,* or *S Plates & #15 Fasteners* secured at a rate of 1 fastener per 1.00ft^2	*Sentinel* or *Sentinel HFB*	*Sentinel: H2O BA or S BA Sentinel HFB: D-SPF*	**-82.5 (Lim. 7)**
S-AM-35	*G33, L6, F1, S24*	Min 0.5-inch *DDP* or *SR*	*S Plates & Fasteners* secured at a rate of 1 per 2-ft^2	*VR TA, VR SA, VR SV, VR HA, VR EF, or VR SV*	Min. 1.5-inch *ISO s* or *ISO r*	*Duotack* applied 12-inch o.c	OPTIONAL *DDP, DXC, DXF, or SR* secured with *Duotack* applied 12-inch o.c. (Coverboard REQUIRED over *ISO x or ISO r)*	*Sentinel HFB*	*CR-20*	**-82.5 (Lim. 7)**
S-AM-36	*G33, L6, F1, S24*	Min 0.5-inch *DDP* or *SR*	*S Plates & Fasteners* secured at a rate of 1 per 2-ft^2	*VR TA, VR SA, VR SV, VR HA, VR EF, or VR SV*	Min. 1.5-inch *ISO-II*	*Duotack* applied 12-inch o.c	OPTIONAL *DDP, DXC, DXF, or SR* secured with *Duotack* applied 12-inch o.c. (Coverboard REQUIRED over *ISO x or ISO r)*	*Sentinel* or *Sentinel HFB*	*Sentinel: H2O BA or S BA Sentinel HFB: H2O BA*	**-82.5 (Lim. 7)**
S-AM-37	*G33, L6, F1, S24*	Min 0.5-inch *DDP* or *SR*	*S Plates & Fasteners* secured at a rate of 1 per 2-ft^2	*VR TA, VR SA, VR SV, VR HA, VR EF, or VR SV*	Min. 1.5-inch *ISO s* or *ISO+ x*	*Duotack* applied 12-inch o.c	OPTIONAL *DDP, DXF, or SR* secured with *Duotack* applied 12-inch o.c.	*Sentinel HFB*	*D-SPF*	**-82.5 (Lim. 7)**

This evaluation report is provided for State of Florida product approval under Rule 61G20-3. The manufacturer shall notify CREEK Technical Services, LLC of any product changes or quality assurance changes throughout the duration for which this report is valid. This evaluation report does not express nor imply warranty, installation, recommended use, or other product attributes that are not specifically addressed herein.

Assemblies with Adhered Membranes over *Steel Deck* (New, Existing, or *Recover*)										
System No.	Deck Detail	Thermal Barrier or Base Layer Insulation	Thermal Barrier or Base Layer Attachment	Vapor Retarder	Top Layer Insulation	Top Insulation Attachment	Coverboard	Membrane	Attachment	*MDP* (psf)
S-AM-38	*G33, L6, F1, S24*	OPTIONAL *DD*, *DDP*, *DX*, *DXF*, or *DXC*	-	-	Min. 2-inch *ISO s* or *ISO rx*	*S Plates & Fasteners* secured at a rate of 1 fastener per 1.6ft^2	OPTIONAL *DDP, DXC, DXF, or SR* secured with *Duotack* applied 12-inch o.c. (Coverboard REQUIRED over *ISO x or ISO r)*	*Sentinel HFB*	*CR-20*	**-82.5 (Lim. 7)**
S-AM-39	*G33, L6, F1, S24*	OPTIONAL *DD*, *DDP*, *DX*, *DXF*, or *DXC*	-	-	Min. 2-inch *ISO s*, *ISO r* or *ISO + x*	*S Plates & Fasteners* secured at a rate of 1 fastener per 1.6ft^2	OPTIONAL *DDP, DXC, DXF, or SR* secured with *Duotack* applied 12-inch o.c. (Coverboard REQUIRED over *ISO x or ISO r)*	*Sentinel* or *Sentinel HFB*	*Sentinel: H2O BA or S BA Sentinel HFB: H2O BA*	**-82.5 (Lim. 7)**
S-AM-40	*G33, L6, F1, S24*	OPTIONAL *DD*, *DDP*, *DX*, *DXF*, or *DXC*	-	-	Min. 2-inch *ISO s* or *ISO + x*	*S Plates & Fasteners* secured at a rate of 1 fastener per 1.-ft^2	OPTIONAL *DDP, DXF, or SR* secured with *Duotack* applied 12-inch o.c.	*Sentinel HFB*	*D-SPF*	**-82.5 (Lim. 7)**
S-AM-41	*G33, L6, F1, S24*	OPTIONAL *DD*, *DDP*, *DX*, *DXF*, or *DXC*	-	-	Min. 2-inch *ISO s* or *ISO r*	*S Plates & Fasteners* secured at a rate of 1 fastener per 1.6ft^2	OPTIONAL *DDP, DXC, DXF, or SR* secured with *D-SPF* applied 12-inch o.c. (Coverboard REQUIRED over *ISO r)*	*Sentinel* or *Sentinel HFB*	*Sentinel: H2O BA or S BA Sentinel HFB: H2O BA or CR-20*	**-82.5 (Lim. 7)**
S-AM-42	*G33, L6, F1, S24*	OPTIONAL *DD*, *DDP*, *DX*, *DXF*, or *DXC*	-	-	Min. 2-inch *ISO s*	*S Plates & Fasteners* secured at a rate of 1 fastener per 1.6ft^2	OPTIONAL *DDP, DXF, or SR* secured with *D-SPF* applied 12-inch o.c.	*Sentinel HFB*	*D-SPF*	**-82.5 (Lim. 7)**

This evaluation report is provided for State of Florida product approval under Rule 61G20-3. The manufacturer shall notify CREEK Technical Services, LLC of any product changes or quality assurance changes throughout the duration for which this report is valid. This evaluation report does not express nor imply warranty, installation, recommended use, or other product attributes that are not specifically addressed herein.

Assemblies with Adhered Membranes over *Steel Deck* (New, Existing, or *Recover*)										
System No.	Deck Detail	Thermal Barrier or Base Layer Insulation	Thermal Barrier or Base Layer Attachment	Vapor Retarder	Top Layer Insulation	Top Insulation Attachment	Coverboard	Membrane	Attachment	*MDP* (psf)
S-AM-43	*G33, L6, F1, S24*	OPTIONAL *DD*, *DDP*, *DX*, *DXF*, or *DXC*	-	-	Min. 2-inch *ISO s* or *ISO r*	*S Plates & Fasteners* secured at a rate of 1 fastener per 1.6ft^2	*DDP, DXF, or SR* secured with *D-SPF* applied 12-inch o.c.	*Sentinel HFB*	*D-SPF*	**-82.5 (Lim. 7)**
S-AM-44	*G80, L6, F2, S12*	OPTIONAL *DD*, *DDP*, *DX*, *DXF*, or *DXC*	Simultaneously secured with top layer	-	Min. 1.5-inch *Approved Insulation*	Simultaneously secured with top layer	Min 0.5-inch *DDP* secured with *S Plates & Fasteners or S Plates & #15 Fasteners* secured at a rate of 1 fastener per 1ft^2	*Sentinel* or *Sentinel HFB*	*Sentinel: H2O BA or S BA Sentinel HFB: D-SPF*	**-127.5 (Lim. 7)**

Mechanically Fastened Assemblies over *Steel Deck* (New, Existing, or *Recover*)						
System No.	Max. Deck Span	Insulation	Insulation Attachment	Membrane	Attachment	*MDP* (psf)
S-M-1	*G33, L6, F1, S24*	Min. 1.5-inch *Approved Insulation*	Preliminarily secured	*Sentinel*	*#15 Fastener* and 2.4" Seam Plates fastened 12-inch o.c. within laps spaced 56-inch o.c.	**-45 (Lim. 7)**
S-M-2	*G33, L6, P or F1, S24*	Min. 0.5-inch *Approved Insulation*	Preliminarily secured	*Sentinel*	*#15 Fastener* and 2.4" Seam Plates fastened 6-inch o.c. within 6-inch wide laps spaced 114-inch o.c.; fastener centered 1.25-inches from edge of tab	**-45 (Lim. 7)**
S-M-3	*G80, L6, F1W, S12*	Min. 1.5-inch *Approved Insulation*	Preliminarily secured	*Sentinel* (120-inch wide)	*#15 Fastener* and 2.4" Seam Plates fastened 12-inch o.c. within laps spaced 114-inch o.c.	**-52.5 (Lim. 7)**
S-M-4	*G33, L6, P, S24*	Min. 0.5-inch *Approved Insulation*	Preliminarily secured	*Sentinel*	*#15 Fastener* and 2.4" Seam Plates fastened 6-inch o.c. within 6-inch wide laps spaced 54-inch o.c.; fastener centered 1.25-inches from edge of tab	**-60 (Lim. 7)**
S-M-5	*G33, L6, F1, S24*	Min. 0.5-inch *Approved Insulation*	Preliminarily secured	*Sentinel*	*#15 Fastener* and 2.4" Seam Plates fastened 6-inch o.c. within 6-inch wide laps spaced 54-inch o.c.; fastener centered 1.25-inches from edge of tab	**-67.5 (Lim. 7)**
S-M-6	*G33, L6, F1W, S12*	Min. 1.5-inch *Approved Insulation*	Preliminarily secured	*Sentinel* (120-inch wide)	*#15 Fastener* and 2.4" Seam Plates fastened 6-inch o.c. within 6-inch wide laps spaced 114-inch o.c.	**-67.5 (Lim. 7)**

This evaluation report is provided for State of Florida product approval under Rule 61G20-3. The manufacturer shall notify CREEK Technical Services, LLC of any product changes or quality assurance changes throughout the duration for which this report is valid. This evaluation report does not express nor imply warranty, installation, recommended use, or other product attributes that are not specifically addressed herein.

Induction Welded Assemblies over *Steel Deck* (New, Existing, or *Recover*)								
System No.	Max. Deck Span	Base Layer Insulation	Base Insulation Attachment	Top Layer Insulation	Top Insulation Attachment	Membrane	Attachment	*MDP* (psf)
S-W-1	*G33, L6, P or F1, S36*	OPTIONAL *Approved Insulation*	Secured with Top Layer	Min. 1.5-inch *Approved Insulation*	*#15 isoweld* secured at a rate of *1 per 6.00-ft*^{2} (See Appendix A- Induction Weld Patterns)	*Sentinel*	Induction welded to each insulation plate	**-37.5 (Lim. 7; Non-HVHZ)**
S-W-2	*G80, L6 P or F1, S36*	OPTIONAL *Approved Insulation*	Secured with Top Layer	Min. 1.5-inch *Approved Insulation*	*#12 isoweld* secured at a rate of *1 per 6.00-ft*^{2} (See Appendix A- Induction Weld Patterns)	*Sentinel*	Induction welded to each insulation plate	**-37.5 (Lim. 7; Non-HVHZ)**
S-W-3	*G33*	OPTIONAL *Approved Insulation*	Secured with Top Layer	Min. 1.5-inch *Approved Insulation*	*SENTINEL PVC IW* secured at a rate of 1 fastener per 5.33ft^2; Roof boards are oriented with the 8ft dimension perpendicular to the steel deck ribs with adjacent boards offset by their 8ft or 4ft dimension by 12-inches to stagger the fastening	*Sentinel*	Induction welded to each insulation plate	**-45 (Lim. 7; Non-HVHZ)**
S-W-4	*G33, L6, P or F1, S36*	OPTIONAL *Approved Insulation*	Secured with Top Layer	Min. 1.5-inch *Approved Insulation*	*#15 isoweld* secured 12-inch o.c. in rows spaced 60-inch o.c.	*Sentinel*	Induction welded to each insulation plate	**-45 (Lim. 7)**
S-W-5	*G80, L6 P or F1, S36*	OPTIONAL *Approved Insulation*	Secured with Top Layer	Min. 1.5-inch *Approved Insulation*	*#12 isoweld* secured 12-inch o.c. in rows spaced 60-inch o.c.	*Sentinel*	Induction welded to each insulation plate	**-45 (Lim. 7)**
S-W-6	*G33, L5*	OPTIONAL *Approved Insulation*	Secured with Top Layer	*Approved Insulation*	*RhinoBond* secured *6 per 4 ft x 8 ft board*	*Sentinel*	Induction welded to each insulation plate	**-45 (Lim. 9)**
S-W-7	*G33, L6, P, S24*	OPTIONAL *Approved Insulation*	Secured with Top Layer	*Approved Insulation*	OMG XHD Fastener with RhinoBond Insulation Plates secured at a rate of *1 per 6.00-ft*^{2} (See Appendix A- Induction Weld Patterns)	*Sentinel*	Induction welded to each insulation plate	**-45 (Lim. 7)**
S-W-8	*G33, L6, F1, S12*	OPTIONAL *Approved Insulation*	Secured with Top Layer	Min. 1.5-inch *Approved Insulation*	*SENTINEL PVC IW* secured 12-inch o.c.in rows spaced 5-ft o.c.	*Sentinel*	Induction welded to each insulation plate	**-45 (Lim. 7)**
S-W-9	*G33, L6, P or F1, S36*	OPTIONAL *Approved Insulation*	Secured with Top Layer	Min. 1.5-inch *Approved Insulation*	*#15 isoweld* secured at a rate of *1 per 4.00-ft*^{2} (See Appendix A- Induction Weld Patterns)	*Sentinel*	Induction welded to each insulation plate	**-52.5 (Lim. 7)**
S-W-10	*G80, L6 P or F1, S36*	OPTIONAL *Approved Insulation*	Secured with Top Layer	Min. 1.5-inch *Approved Insulation*	*#12 isoweld* secured at a rate of *1 per 4.00-ft*^{2} (See Appendix A- Induction Weld Patterns)	*Sentinel*	Induction welded to each insulation plate	**-52.5 (Lim. 7)**
S-W-11	*G33, L6, F1, S24*	OPTIONAL *Approved Insulation*	Secured with Top Layer	*Approved Insulation*	OMG XHD Fastener with RhinoBond Insulation Plates secured at a rate of *1 per 4.00-ft*^{2} (See Appendix A- Induction Weld Patterns)	*Sentinel*	Induction welded to each insulation plate	**-52.5 (Lim. 7)**

This evaluation report is provided for State of Florida product approval under Rule 61G20-3. The manufacturer shall notify CREEK Technical Services, LLC of any product changes or quality assurance changes throughout the duration for which this report is valid. This evaluation report does not express nor imply warranty, installation, recommended use, or other product attributes that are not specifically addressed herein.

Induction Welded Assemblies over *Steel Deck* (New, Existing, or *Recover*)								
System No.	Max. Deck Span	Base Layer Insulation	Base Insulation Attachment	Top Layer Insulation	Top Insulation Attachment	Membrane	Attachment	*MDP* (psf)
S-W-12	*G33, L6, P, S24*	OPTIONAL *Approved Insulation*	Secured with Top Layer	*Approved Insulation*	OMG XHD Fastener with RhinoBond Insulation Plates secured at a rate of *1 per 4.00-ft*^{2} (See Appendix A- Induction Weld Patterns)	*Sentinel*	Induction welded to each insulation plate	**-52.5 (Lim. 7)**
S-W-13	*G33, L6, F1, S12*	OPTIONAL *Approved Insulation*	Secured with Top Layer	*Approved Insulation*	*RhinoBond* secured 6-inch o.c. in rows spaced 72-inches o.c.	*Sentinel*	Induction welded to each insulation plate	**-52.5 (Lim. 7)**
S-W-14	*G33, L6, F1, S24*	OPTIONAL *Approved Insulation*	Secured with Top Layer	Min. 1.5-inch *Approved Insulation*	*SENTINEL PVC IW* secured at a rate 1 fastener per 4.00ft^2; Roof boards are oriented with the 8ft dimension parallel to the steel deck ribs with adjacent boards offset along their 8ft dimension by 12-inches to stagger the fastening	*Sentinel*	Induction welded to each insulation plate	**-52.5 (Lim. 7)**
S-W-15	*G33, L6, F1, S12*	OPTIONAL *Approved Insulation*	Secured with Top Layer	Min. 1.5-inch *Approved Insulation*	*SENTINEL PVC IW* secured 12-inch o.c.in rows spaced 4-ft o.c.	*Sentinel*	Induction welded to each insulation plate	**-52.5 (Lim. 7)**
S-W-16	*G33, L6, F1, S24*	OPTIONAL *Approved Insulation*	Secured with Top Layer	Min. 1.5-inch *Approved Insulation*	*SENTINEL PVC IW* secured at a rate of 1 fastener per 3.2ft^2; Roof boards are oriented with the 8ft dimension parallel to the steel deck ribs with adjacent boards offset along their 4ft dimension by 12-inches to stagger the fastening	*Sentinel*	Induction welded to each insulation plate	**-60 (Lim. 7)**
S-W-17	*G33, L6, F1, S12*	OPTIONAL *Approved Insulation*	Secured with Top Layer	Min. 1.5-inch *Approved Insulation*	*SENTINEL PVC IW* secured 12-inch o.c.in rows spaced 3-ft o.c.	*Sentinel*	Induction welded to each insulation plate	**-60 (Lim. 7)**
S-W-18	*G33, L6, F1W, S12*	OPTIONAL *Approved Insulation*	Secured with Top Layer	Min. 1.5-inch *Approved Insulation*	*SENTINEL PVC IW* secured at a rate of 1 fastener per 2.67ft^2; Roof boards are oriented with the 8ft dimension perpendicular to the steel deck ribs with adjacent boards offset along their 4ft dimension by 12-inches to stagger the fastening	*Sentinel*	Induction welded to each insulation plate	**-67.5 (Lim. 7)**
S-W-19	*G33, L6, F1, S12*	OPTIONAL *Approved Insulation*	Secured with Top Layer	Min. 1.5-inch *Approved Insulation*	*SENTINEL PVC IW* secured 6-inch o.c.in rows spaced 5-ft o.c.	*Sentinel*	Induction welded to each insulation plate	**-75 (Lim. 7)**
S-W-20	*G33, L6, F1, S24*	OPTIONAL *Approved Insulation*	Secured with Top Layer	*Approved Insulation*	OMG XHD Fastener with RhinoBond Insulation Plates secured at a rate of *1 per 3.00-ft*^{2} (See Appendix A- Induction Weld Patterns)	*Sentinel*	Induction welded to each insulation plate	**-75 (Lim. 7)**
S-W-21	*G33, L6, P, S24*	OPTIONAL *Approved Insulation*	Secured with Top Layer	*Approved Insulation*	OMG XHD Fastener with RhinoBond Insulation Plates secured at a rate of *1 per 3.00-ft*^{2} (See Appendix A- Induction Weld Patterns)	*Sentinel*	Induction welded to each insulation plate	**-75 (Lim. 7)**

This evaluation report is provided for State of Florida product approval under Rule 61G20-3. The manufacturer shall notify CREEK Technical Services, LLC of any product changes or quality assurance changes throughout the duration for which this report is valid. This evaluation report does not express nor imply warranty, installation, recommended use, or other product attributes that are not specifically addressed herein.

Induction Welded Assemblies over *Steel Deck* (New, Existing, or *Recover*)								
System No.	Max. Deck Span	Base Layer Insulation	Base Insulation Attachment	Top Layer Insulation	Top Insulation Attachment	Membrane	Attachment	*MDP* (psf)
S-W-22	*G33, L6, F1, S12*	OPTIONAL *Approved Insulation*	Secured with Top Layer	*Approved Insulation*	*RhinoBond* secured 6-inch o.c. in rows spaced 48-inches o.c.	*Sentinel*	Induction welded to each insulation plate	**-82.5 (Lim. 7)**
S-W-23	*G33, L6, P or F1, S36*	OPTIONAL *Approved Insulation*	Secured with Top Layer	Min. 1.5-inch *Approved Insulation*	*#15 isoweld* secured at a rate of *1 per 3.00-ft*^{2} (See Appendix A- Induction Weld Patterns)	*Sentinel*	Induction welded to each insulation plate	**-82.5 (Lim. 7)**
S-W-24	*G80, L6 P or F1, S36*	OPTIONAL *Approved Insulation*	Secured with Top Layer	Min. 1.5-inch *Approved Insulation*	*#12 isoweld* secured at a rate of *1 per 3.00-ft*^{2} (See Appendix A- Induction Weld Patterns)	*Sentinel*	Induction welded to each insulation plate	**-82.5 (Lim. 7)**
S-W-25	*G33, L6, F1W, S12*	OPTIONAL *Approved Insulation*	Secured with Top Layer	Min. 1.5-inch *Approved Insulation*	*SENTINEL PVC IW* secured at a rate of 1 fastener per 2.00ft^2; Roof boards are oriented with the 8ft dimension perpendicular to the steel deck ribs with adjacent boards offset along their 4ft dimension by 12-inches to stagger the fastening	*Sentinel*	Induction welded to each insulation plate	**-82.5 (Lim. 7)**
S-W-26	*G80, L6, F1W, S12*	OPTIONAL *Approved Insulation*	Secured with Top Layer	Min. 1.5-inch *Approved Insulation*	*SENTINEL PVC IW* secured at a rate of 1 fastener per 2.00ft^2; Roof boards are oriented with the 8ft dimension perpendicular to the steel deck ribs with adjacent boards offset along their 4ft dimension by 12-inches to stagger the fastening	*Sentinel*	Induction welded to each insulation plate	**-90 (Lim. 7)**
S-W-27	*G33, L6, F1, S12*	OPTIONAL *Approved Insulation*	Secured with Top Layer	Min. 1.5-inch *Approved Insulation*	*SENTINEL PVC IW* secured 6-inch o.c.in rows spaced 4-ft o.c.	*Sentinel*	Induction welded to each insulation plate	**-90 (Lim. 7)**
S-W-28	*G33, L6, P or F1, S36*	OPTIONAL *Approved Insulation*	Secured with Top Layer	Min. 1.5-inch *Approved Insulation*	*#15 isoweld* secured 6-inch o.c. in rows spaced 60-inch o.c.	*Sentinel*	Induction welded to each insulation plate	**-90 (Lim. 7)**
S-W-29	*G80, L6 P or F1, S36*	OPTIONAL *Approved Insulation*	Secured with Top Layer	Min. 1.5-inch *Approved Insulation*	*#12 isoweld* secured 6-inch o.c. in rows spaced 60-inch o.c.	*Sentinel*	Induction welded to each insulation plate	**-90 (Lim. 7)**
S-W-30	*G80, L6, F1W, S12*	OPTIONAL *Approved Insulation*	Secured with Top Layer	Min. 1.5-inch *Approved Insulation*	*SENTINEL PVC IW* secured at a rate of 1 fastener per 1.78ft^2; Roof boards are oriented with the 8ft dimension parallel to the steel deck ribs with adjacent boards offset along their 4ft dimension by 6-inches to stagger the fastening	*Sentinel*	Induction welded to each insulation plate	**-105 (Lim. 7)**
S-W-31	*G33, L6, F1, S12*	OPTIONAL *Approved Insulation*	Secured with Top Layer	Min. 1.5-inch *Approved Insulation*	*SENTINEL PVC IW* secured 6-inch o.c.in rows spaced 3-ft o.c.	*Sentinel*	Induction welded to each insulation plate	**-112.5 (Lim. 7)**

This evaluation report is provided for State of Florida product approval under Rule 61G20-3. The manufacturer shall notify CREEK Technical Services, LLC of any product changes or quality assurance changes throughout the duration for which this report is valid. This evaluation report does not express nor imply warranty, installation, recommended use, or other product attributes that are not specifically addressed herein.

Induction Welded Assemblies over *Steel Deck* (New, Existing, or *Recover*)								
System No.	Max. Deck Span	Base Layer Insulation	Base Insulation Attachment	Top Layer Insulation	Top Insulation Attachment	Membrane	Attachment	*MDP* (psf)
S-W-32	*G80, L6, F2W, S12*	OPTIONAL *Approved Insulation*	Secured with Top Layer	Min. 1.5-inch *Approved Insulation*	*SENTINEL PVC IW* secured at a rate of 1 fastener per 1.33ft^2; Roof boards are oriented with the 8ft dimension parallel to the steel deck ribs with adjacent boards offset along their 4ft dimension by 6-inches to stagger the fastening	*Sentinel*	Induction welded to each insulation plate	**-135 (Lim. 7)**
S-W-33	*G80, L6, F2W, S12*	OPTIONAL *Approved Insulation*	Secured with Top Layer	Min. 1.5-inch *Approved Insulation*	*SENTINEL PVC IW* secured at a rate of 1 fastener per 1.00ft^2	*Sentinel*	Induction welded to each insulation plate	**-142.5 (Lim. 7)**

Assemblies with Adhered Membranes over *Wood Deck* (New, Existing, or *Recover*)							
System No.	Deck Detail	Base Insulation	Top Insulation	Insulation Attachment	Membrane	Attachment	*MDP* (psf)
W-AM-1	*T19/32O*	OPTIONAL *Approved Insulation*	Min. 0.5-inch *DXF*	*VERSA-FAST* with *1 fastener per plate* secured at a rate of *8 per 4 ft x 8 ft board*	*Sentinel*	*H2O BA* or *S BA*	**-30 (Lim. 7; Non-HVHZ)**
W-AM-2	*T19/32O*	OPTIONAL *Approved Insulation*	Min. 0.5-inch *DXF*	*VERSA-FAST* with *1 fastener per plate* secured at a rate of *8 per 4 ft x 8 ft board*	*Sentinel HFB*	*H2O BA, D-SPF* or *CR-20*	**-30 (Lim. 7; Non-HVHZ)**
W-AM-3	*T19/32P*	OPTIONAL *Approved Insulation*	Min. 0.5-inch *DXF*	*VERSA-FAST* with *1 fastener per plate* secured at a rate of *8 per 4 ft x 8 ft board*	*Sentinel*	*H2O BA* or *S BA*	**-37.5 (Lim. 7; Non-HVHZ)**
W-AM-4	*T19/32P*	OPTIONAL *Approved Insulation*	Min. 0.5-inch *DXF*	*VERSA-FAST* with *1 fastener per plate* secured at a rate of *8 per 4 ft x 8 ft board*	*Sentinel HFB*	*H2O BA, D-SPF* or *CR-20*	**-37.5 (Lim. 7; Non-HVHZ)**
W-AM-5	*T19/32P, L24, #8-6/6*	OPTIONAL *Approved Insulation*	Min. 0.5-inch *DXF*	*VERSA-FAST* with *2 fasteners per plate* secured at a rate of *8 per 4 ft x 8 ft board*	*Sentinel*	*H2O BA* or *S BA*	**-37.5 (Lim. 7; Non-HVHZ)**
W-AM-6	*T19/32P, L24, #8-6/6*	OPTIONAL *Approved Insulation*	Min. 0.5-inch *DXF*	*VERSA-FAST* with *2 fasteners per plate* secured at a rate of *8 per 4 ft x 8 ft board*	*Sentinel HFB*	*H2O BA, D-SPF* or *CR-20*	**-37.5 (Lim. 7; Non-HVHZ)**
W-AM-7	*T19/32P, L24, 0.113-6/6*	OPTIONAL *Approved Insulation*	*DXF*	PERLOK #15 EHD Fastener and Sentinel 3" Metal Plate at a rate of *16 per 4 ft x 8 ft board*	*Sentinel*	*H2O BA* or *S BA*	**-52.5 (Lim. 7)**

This evaluation report is provided for State of Florida product approval under Rule 61G20-3. The manufacturer shall notify CREEK Technical Services, LLC of any product changes or quality assurance changes throughout the duration for which this report is valid. This evaluation report does not express nor imply warranty, installation, recommended use, or other product attributes that are not specifically addressed herein.

Assemblies with Adhered Membranes over *Wood Deck* (New, Existing, or *Recover*)							
System No.	Deck Detail	Base Insulation	Top Insulation	Insulation Attachment	Membrane	Attachment	*MDP* (psf)
W-AM-8	*T19/32P, L24, 0.113-6/6*	OPTIONAL *Approved Insulation*	*DXC*	*S Plates & #15 Fasteners* secured at a rate of *16 per 4 ft x 8 ft board*	*Sentinel*	*H2O BA* or *S BA*	**-52.5 (Lim. 7)**
W-AM-9	*T19/32P, L24, 0.113-6/6*	OPTIONAL *Approved Insulation*	*DXF*	PERLOK #15 EHD Fastener and Sentinel 3" Metal Plate at a rate of *16 per 4 ft x 8 ft board*	*Sentinel HFB*	*H2O BA* or *D-SPF*	**-52.5 (Lim. 7)**
W-AM-10	*T19/32P, L24, 0.113-6/6*	OPTIONAL *Approved Insulation*	*DXC*	*S Plates & #15 Fasteners* secured at a rate of *16 per 4 ft x 8 ft board*	*Sentinel HFB*	*H2O BA*	**-52.5 (Lim. 7)**
W-AM-11	*T19/32P, L24, 0.113-6/6*	OPTIONAL *Approved Insulation*	*DXF*	PERLOK #15 EHD Fastener and Sentinel 3" Metal Plate at a rate of *16 per 4 ft x 8 ft board*	*Sentinel HFB*	*CR-20* or *D-SPF*	**-60 (Lim. 7)**
W-AM-12	*T19/32P, L24, 0.113-6/6*	OPTIONAL *Approved Insulation*	*DXC*	*S Plates & #15 Fasteners* secured at a rate of *16 per 4 ft x 8 ft board*	*Sentinel HFB*	*CR-20*	**-60 (Lim. 7)**
W-AM-13	*T19/32P, L24, 0.113-6/6*	OPTIONAL *Approved Insulation*	*DXF*	PERLOK #15 EHD Fastener and Sentinel 3" Metal Plate at a rate of *18 per 4 ft x 8 ft board*	*Sentinel*	*H2O BA* or *S BA*	**-67.5 (Lim. 7)**
W-AM-14	*T19/32P, L24, 0.113-6/6*	OPTIONAL *Approved Insulation*	*DXC*	*S Plates & #15 Fasteners* secured at a rate of *18 per 4 ft x 8 ft board*	*Sentinel*	*H2O BA* or *S BA*	**-67.5 (Lim. 7)**
W-AM-15	*T19/32P, L24, 0.113-6/6*	OPTIONAL *Approved Insulation*	*DXF*	PERLOK #15 EHD Fastener and Sentinel 3" Metal Plate at a rate of *18 per 4 ft x 8 ft board*	*Sentinel HFB*	*H2O BA* or *D-SPF*	**-67.5 (Lim. 7)**
W-AM-16	*T19/32P, L24, 0.113-6/6*	OPTIONAL *Approved Insulation*	*DXC*	*S Plates & #15 Fasteners* secured at a rate of *18 per 4 ft x 8 ft board*	*Sentinel HFB*	*H2O BA*	**-67.5 (Lim. 7)**
W-AM-17	*T15/32P, L24, #10-4/4* (All plywood edges shall be blocked)	Min. 2-inch *ISO r* or *ISO s* secured with VERSA-FAST Plates at a rate of *18 per 4 ft x 8 ft board* with two (2) PERLOK #14 HDFasteners installed 180°	OPTIONAL *DDP, DXC, DXF, or SR*	*Duotack* or *D-SPF* applied 12-inch o.c.	*Sentinel*	*H2O BA* or *S BA*	**-67.5 (Lim. 7)**
W-AM-18	*T15/32P, L24, #10-4/4* (All plywood edges shall be blocked)	Min. 2-inch *ISO r* or *ISO s* secured with VERSA-FAST Plates at a rate of *18 per 4 ft x 8 ft board* with two (2) PERLOK #14 HDFasteners installed 180°	OPTIONAL *DDP, DXC, DXF, or SR*	*Duotack* or *D-SPF* applied 12-inch o.c.	*Sentinel HFB*	*H2O BA* or *CR-20*	**-67.5 (Lim. 7)**

This evaluation report is provided for State of Florida product approval under Rule 61G20-3. The manufacturer shall notify CREEK Technical Services, LLC of any product changes or quality assurance changes throughout the duration for which this report is valid. This evaluation report does not express nor imply warranty, installation, recommended use, or other product attributes that are not specifically addressed herein.

Assemblies with Adhered Membranes over *Wood Deck* (New, Existing, or *Recover*)							
System No.	Deck Detail	Base Insulation	Top Insulation	Insulation Attachment	Membrane	Attachment	*MDP* (psf)
W-AM-19	*T15/32P, L24, #10-4/4* (All plywood edges shall be blocked)	Min. 2-inch *ISO s* secured with VERSA-FAST Plates at a rate of *18 per 4 ft x 8 ft board* with two (2) PERLOK #14 HDFasteners installed 180°	OPTIONAL *DDP, , DXF, or SR*	*Duotack* or *D-SPF* applied 12-inch o.c.	*Sentinel HFB*	*D-SPF*	**-67.5 (Lim. 7)**
W-AM-20	*T15/32P, L24, #10-4/4* (All plywood edges shall be blocked)	Min. 2-inch *ISO r* or *ISO s* secured with VERSA-FAST Plates at a rate of *18 per 4 ft x 8 ft board* with two (2) PERLOK #14 HDFasteners installed 180°	*DDP, DXF, or SR*	*D-SPF* applied 12-inch o.c.	*Sentinel HFB*	*D-SPF*	**-67.5 (Lim. 7)**
W-AM-21	*T15/32P, L24, #10-4/4* (All plywood edges shall be blocked)	OPTIONAL *Approved Insulation*	Min. 0.5-inch *SR* or min. 2-inch *ISO+ s*	VERSA-FAST Plates secured at a rate of *18 per 4 ft x 8 ft board* with two (2) PERLOK #14 HDFasteners installed 180°	*Sentinel*	*H2O BA* or *S BA*	**-67.5 (Lim. 7)**
W-AM-22	*T15/32P, L24, #10-4/4* (All plywood edges shall be blocked)	OPTIONAL *Approved Insulation*	Min. 0.5-inch *SR* or min. 2-inch *ISO+ s*	VERSA-FAST Plates secured at a rate of *18 per 4 ft x 8 ft board* with two (2) PERLOK #14 HDFasteners installed 180°	*Sentinel HFB*	*H2O BA, D-SPF* or *CR-20*	**-67.5 (Lim. 7)**
W-AM-23	*T19/32P, L24, 0.113-6/6*	OPTIONAL *Approved Insulation*	*DXF*	PERLOK #15 EHD Fastener and Sentinel 3" Metal Plate at a rate of *18 per 4 ft x 8 ft board*	*Sentinel HFB*	*CR-20* or *D-SPF*	**-75 (Lim. 7)**
W-AM-24	*T19/32P, L24, 0.113-6/6*	OPTIONAL *Approved Insulation*	*DXC*	*S Plates & #15 Fasteners* secured at a rate of *18 per 4 ft x 8 ft board*	*Sentinel HFB*	*CR-20*	**-75 (Lim. 7)**

Mechanically Fastened Assemblies over *Wood Deck* (New, Existing, or *Recover*)							
System No.	Deck Detail	Thermal Barrier	Insulation	Insulation Attachment	Membrane	Membrane Attachment	*MDP* (psf)
W-M-1	*T19/32P, L24, 0.113-6/6*	As required	Min. 0.5-inch *Approved Insulation*	Preliminarily secured	*Sentinel*	*#15 Fastener* and 2.4" Seam Plates fastened 6-inch o.c. within 6-inch wide laps spaced 114-inch o.c.; fastener centered 2-inches from edge of tab	**-45 (Lim. 7)**
W-M-2	*T19/32P, L24, 0.113-6/6*	As required	Min. 0.5-inch *Approved Insulation*	Preliminarily secured	*Sentinel*	*#15 Fastener* and 2.4" Seam Plates fastened 6-inch o.c. within 6-inch wide laps spaced 54-inch o.c.; fastener centered 1.25-inches from edge of tab	**-67.5 (Lim. 7)**

This evaluation report is provided for State of Florida product approval under Rule 61G20-3. The manufacturer shall notify CREEK Technical Services, LLC of any product changes or quality assurance changes throughout the duration for which this report is valid. This evaluation report does not express nor imply warranty, installation, recommended use, or other product attributes that are not specifically addressed herein.

Induction Welded Assemblies over *Wood Deck* (New, Existing, or *Recover*)							
System No.	Deck Detail	Thermal Barrier	Insulation	Insulation Attachment	Membrane	Membrane Attachment	*MDP* (psf)
W-W-1	*T19/32P, L24, 0.113-12/6*	As required	*Approved Insulation*	*RhinoBond* through-fastened to wood truss at a rate of *12 Plates/Board*	*Sentinel*	Induction welded to each insulation plate	**-60 (Lim. 7)**
W-W-2	*T19/32P, L24, 0.113-12/6*	As required	*Approved Insulation*	*RhinoBond* through-fastened to wood truss at a rate of 16 *Plates/Board*	*Sentinel*	Induction welded to each insulation plate	**-90 (Lim. 7)**

END OF REPORT

This evaluation report is provided for State of Florida product approval under Rule 61G20-3. The manufacturer shall notify CREEK Technical Services, LLC of any product changes or quality assurance changes throughout the duration for which this report is valid. This evaluation report does not express nor imply warranty, installation, recommended use, or other product attributes that are not specifically addressed herein.